ICOM

SERVICE MANUAL

HF/VHF/UHF ALL MODE TRANSCEIVER

IC-706MKIIG

Icom Inc.

INTRODUCTION

This service manual describes the latest service information for the **IC-706MKIIG** HF/VHF/UHF ALL MODE TRANSCEIVER at the time of publication.

VERSION NO.	VERSION	SYMBOL
#02, #12	Europe	EUR
#03, #13	France	FRA
#04, #14	Spain	ESP
#05, #15	U.S.A.	USA
#08, #18	Other	OTH

To upgrade quality, any electrical or mechanical parts and internal circuits are subject to change without notice or obligation.

DANGER

NEVER connect the transceiver to an AC outlet or to a DC power supply that uses more than 16 V. This will ruin the transceiver.

DO NOT expose the transceiver to rain, snow or any liquids.

DO NOT reverse the polarities of the power supply when connecting the transceiver.

DO NOT apply an RF signal of more than 20 dBm (100 mW) to the antenna connector. This could damage the transceiver's front end.

ORDERING PARTS

Be sure to include the following four points when ordering replacement parts:

1. 10-digit order numbers
2. Component part number and name
3. Equipment model name and unit name
4. Quantity required

<SAMPLE ORDER>

1110004080	S.IC	µPC2709T	IC-706MKIIG	MAIN UNIT	5 pieces
8810009020	Screw	FH M2.6 x 5 ZK	IC-706MKIIG	Top cover	10 pieces

Addresses are provided on the inside back cover for your convenience.

REPAIR NOTES

1. Make sure a problem is internal before disassembling the transceiver.
2. **DO NOT** open the transceiver until the transceiver is disconnected from its power source.
3. **DO NOT** force any of the variable components. Turn them slowly and smoothly.
4. **DO NOT** short any circuits or electronic parts. An insulated tuning tool MUST be used for all adjustments.
5. **DO NOT** keep power ON for a long time when the transceiver is defective.
6. **DO NOT** transmit power into a signal generator or a sweep generator.
7. **ALWAYS** connect a 50 dB to 60 dB attenuator between the transceiver and a deviation meter or spectrum analyzer when using such test equipment.
8. **READ** the instructions of test equipment thoroughly before connecting equipment to the transceiver.

TABLE OF CONTENTS

SECTION 1 SPECIFICATIONS

SECTION 2 INSIDE VIEWS

SECTION 3 CIRCUIT DESCRIPTION

3 - 1 RECEIVER CIRCUITS ..... 3 - 1
3 - 2 TRANSMITTER CIRCUITS ..... 3 - 4
3 - 3 PLL CIRCUITS ..... 3 - 6
3 - 4 LOGIC CIRCUITS ..... 3 - 8

SECTION 4 ADJUSTMENT PROCEDURES

4 - 1 PREPARATION BEFORE SERVICING ..... 4 - 1
4 - 2 PLL ADJUSTMENTS ..... 4 - 2
4 - 3 TRANSMITTER ADJUSTMENTS ..... 4 - 2
4 - 4 RECEIVER ADJUSTMENTS ..... 4 - 8
4 - 5 SET MODE ADJUSTMENT ..... 4 - 10

SECTION 5 PARTS LIST

SECTION 6 MECHANICAL PARTS AND DISASSEMBLY

SECTION 7 SEMI-CONDUCTOR INFORMATION

SECTION 8 BOARD LAYOUTS

8 - 1 DISPLAY BOARD ..... 8 - 1
8 - 2 MAIN BOARD ..... 8 - 3
8 - 3 HPF AND DRIVER BOARD ..... 8 - 5
8 - 4 PA UNIT ..... 8 - 7
8 - 5 PLL UNIT ..... 8 - 9
8 - 6 FILTER BOARD ..... 8 - 11

SECTION 9 BLOCK DIAGRAM

SECTION 10 VOLTAGE DIAGRAM

SECTION 1 SPECIFICATIONS

■ GENERAL

• Frequency coverage :

Receive	0.030 – 200.000 MHz*
	430.000 – 470.000 MHz*
Transmit	1.800 – 1.999 MHz*
	3.500 – 3.999 MHz*
	7.000 – 7.300 MHz*
	10.100 – 10.150 MHz
	14.000 – 14.350 MHz
	18.068 – 18.168 MHz
	21.000 – 21.450 MHz
	24.890 – 24.990 MHz
	28.000 – 29.700 MHz
	50.000 – 54.000 MHz*
	144.000 – 148.000 MHz*
	430.000 – 450.000 MHz*

*Depending on version.

• Mode : USB, LSB, CW, RTTY (FSK), AM, FM, WFM (WFM is for receiver only)

• Number of memory ch. : 107 (99 regular, 6 scan edges,1 call)

• Antenna connector : SO-239 × 2 (for HF/50 MHz and 144/440 MHz)/50 Ω

• Power supply requirement : 13.8 V DC ±15% (negative ground)

• Frequency stability : Less than ± 7 ppm from 1 min. to 60 min. after power ON. After that, rate of stability less than ±1 ppm/hr. at +25˚C (+77˚F). Temperature fluctuations 0˚C to +50˚C (+32˚F to +122˚F) less than ± 5 ppm.

• Current consumption :

Transmit	max. power	20 A
Receive	standby	1.8 A
	max. audio	2.0 A

• Usable temperature range : –10˚C to +60˚C (+14˚F to +140˚F)

• Dimensions (projections not included) : 167(W) × 58(H) × 200(D) mm
6 9/16(W) × 2 9/32(H) × 7 7/8(D) inch

• Weight : 2.45 kg (5 lb 6 oz)

• CI-V connector : 2-conductor 3.5 (d) mm (1/8")/8 Ω

• ACC connector : 13-pin

■ TRANSMITTER

• Output power :

1.8–50 MHz band	SSB/CW/RTTY/FM	5–100 W
	AM	2–40 W
144 MHz band	SSB/CW/RTTY/FM	5–50 W
	AM	2–20 W
440 MHz band	SSB/CW/RTTY/FM	2–20 W
	AM	2–8 W

• Modulation system :

SSB	Balanced modulation
AM	Low level modulation
FM	Variable reactance modulation

• Spurious emissions :

Below 47.5 MHz	Less than –50 dB (typical)
Above 47.5 MHz	Less than –60 dB

• Carrier suppression : More than 40 dB

• Unwanted sideband supp. : More than 50 dB

• Microphone connector : 8-pin modular jack (600 Ω)

• KEY connector : 3-conductor 6.35 (d) mm (1/4")

• RTTY connector : 3-conductor 3.5 (d) mm (1/8")

■ RECEIVER

• Receive system :

SSB/CW/AM/WFM	Double superheterodyne
FM	Triple superheterodyne

• Intermediate frequencies :

MODE	1st IF	2nd IF	3rd IF
SSB/AM-N/FM	69.0115 MHz	9.0115 MHz	455 kHz*
AM/FM-N	69.0100 MHz	9.0100 MHz	455 kHz*
CW	69.0106 MHz	9.0106 MHz	—
RTTY	69.0105 MHz	9.0105 MHz	—
WFM	70.7000 MHz	10.7000 MHz	—

*FM or FM-N mode only

• Receive sensitivity : (pre-amp ON)

FREQUENCY	SSB/CW/RTTY	AM	FM
0.5 – 1.8 MHz	—	13 µV	—
1.8 – 28 MHz*	0.16 µV	2 µV	—
28 – 29.999 MHz	0.16 µV	2 µV	0.5 µV
50 MHz band	0.13 µV	1 µV	0.25 µV
144 MHz band	0.11 µV	1 µV	0.18 µV
440 MHz band	0.11 µV	1 µV	0.18 µV

Note: SSB, CW and AM modes are measured at 10 dB S/N; FM mode at 12 dB SINAD.
*Except 4–4.5 MHz, 8–9 MHz.

• Squelch Sensitivity : (pre-amp ON)

SSB	Less than 5.6 µV
FM	Less than 0.32 µV

• Selectivity* :

SSB, CW, RTTY	More than 2.4 kHz/–6 dB Less than 4.8 kHz/–60 dB
AM/FM-N	More than 8.0 kHz/–6 dB Less than 30 kHz/–40 dB
FM	More than 12 kHz/–6 dB Less than 30 kHz/–60 dB

*Without an optional filter unit and with mid bandwidth selected.

• Spurious and image rejection ratio:

HF band	70dB
50 MHz band	65 dB (except IF through)
144/440 MHz band	65 dB

• Audio output power (at 13.8 V DC) : More than 2.0 W at 10% distortion with an 8 Ω load

• RIT variable range : ± 9.99 kHz

• PHONES connector : 3-conductor 3.5 (d) mm (1/8")/8 Ω

• EXT SP connector : 2-conductor 3.5 (d) mm (1/8")/8 Ω

All stated specifications are subject to change without notice or obligation.

SECTION 2 INSIDE VIEWS

● MAIN AND FILTER BOARDS

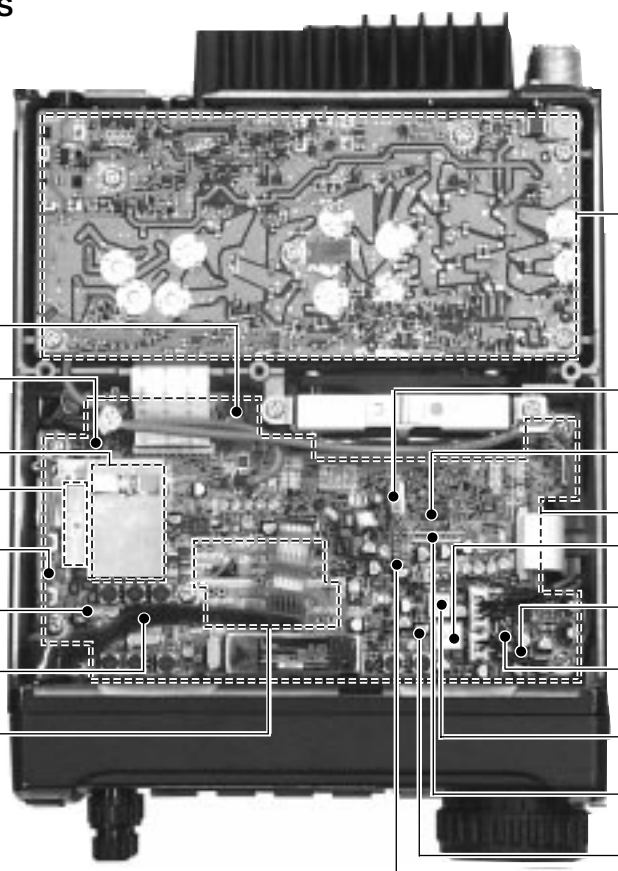

● PA AND PLL UNITS

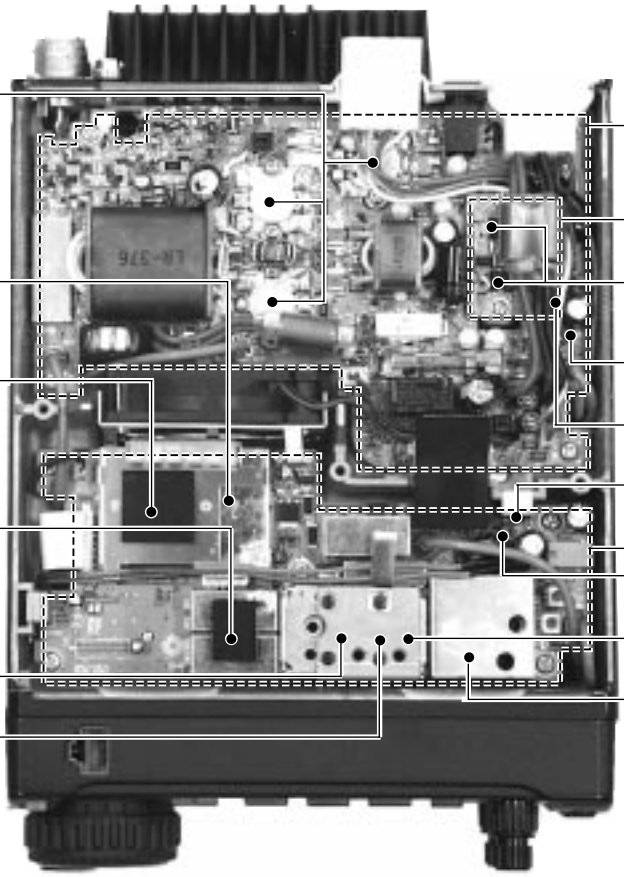

*Located under side of the point

SECTION 3 CIRCUIT DESCRIPTION

3-1 RECEIVER CIRCUITS

3-1-1 HF/50 MHz RF CIRCUIT (FILTER, MAIN AND HPF BOARDS)

HF/50 MHz RF filters pass only the desired band signals and suppress any undesired band signals. The HF/50 MHz RF circuit has 7 low-pass filters and 8 high-pass filters for specified band use.

HF/50 MHz RF signals from the [ANT1] connector, pass through one of 7 low-pass filters as below, the transmit/receive switching relay (FILTER board; RL1) and low-pass filter (FILTER board; L1, L2, C1–C5), and are then applied to the MAIN board via J1 (FILTER board).

• Used RF low-pass filter (FILTER board)

Frequency (MHz)	Control signal	Entrance coil	Frequency (MHz)	Control signal	Entrance coil
0.03–2 MHz	L1	RL15	15–22 MHz	L5	RL11
2–4 MHz	L2	RL13	22–30 MHz	L6	RL7
4–8 MHz	L3	RL5	30–60 MHz	L7	RL3
8–15 MHz	L4	RL9			

The signals from the FILTER board are applied to or bypass the 20 dB attenuator (R122, R125, R126). The signals pass through the high-pass filter (L132, L133, C132–C137) to suppress strong signals below 1.6 MHz and are then applied to the HPF board via the “SAF” terminal.

(1) 0.03–2 MHz and 30–40 MHz

The signals pass through a low-pass filter (L101, L102, C101–C105), and then applied to the preamplifier circuit on the MAIN board.

(2) 2–30 MHz

The signals from the low-pass filter (L101, L102, C101–C105) are applied to one of 6 high-pass filters as at right above and are then applied to the preamplifier circuit on the MAIN board.

(3) 40–60 MHz

The signals pass through the low-pass filter (L172, L173, C172–C176) and the high-pass filter (L174, L175, C177–C181) via D171 and are then applied to the preamplifier circuit on the MAIN board.

• Used RF high-pass filter (HPF board)

Frequency (MHz)	Control signal	Entrance coil	Frequency (MHz)	Control signal	Entrance coil
0.03–2 MHz	THH	D111	15–22 MHz	L5H	D151
2–4 MHz	L2H	D121	22–30 MHz	L6H	D161
4–8 MHz	L3H	D131	30–40 MHz	THH	D111
8–15 MHz	L4H	D141	40–60 MHz	B7H	D171

3-1-2 VHF AND UHF RF CIRCUITS (PA UNIT)

The VHF and UHF RF circuits pass and amplify only the desired band signals and suppresses any undesired band signals. The both RF circuits have a preamplifier and band-pass filters respectively.

• VHF RF CIRCUIT

The VHF RF signals from the [ANT2] connector pass through the low-pass filter (L263–L265, C274–C276) and antenna switching circuit (D291–D293). The signals are applied to the bandpass filter (D403, D409, D408), and are then amplified at the preamplifier circuit (Q403). The amplified signals are then applied to the another bandpass filter (D407, D406, D410).

• UHF RF CIRCUIT

The UHF RF signals from the [ANT2] connector pass through the high-pass filter (L316, L317, C326–C327), low-pass filter (L313–L315, C322–C324) and antenna switching circuit (D341, D342, D343). The signals are amplified at the preamplifier circuit (Q453) between the 2 bandpass filters (D454, D453 and D454, D456).

The filtered signals are applied to the MAIN board via J481 (PA unit) and are then applied to the preamplifier circuit.

D403, D408, D409, D406, D407, D410, D454, D453, D454 and D456 are varactor diodes that tune the ceinter frequency of an RF passband for wide bandwidth receiving and good image response rejection. On the VHF band, receiving signals are above 129 MHz, the switching diodes (D404, D405) are turned off by the control signal “2MBL” from PLL unit, then the varactor diodes (D408, D407) are disconnected.

• RECEIVER CONSTRUCTION

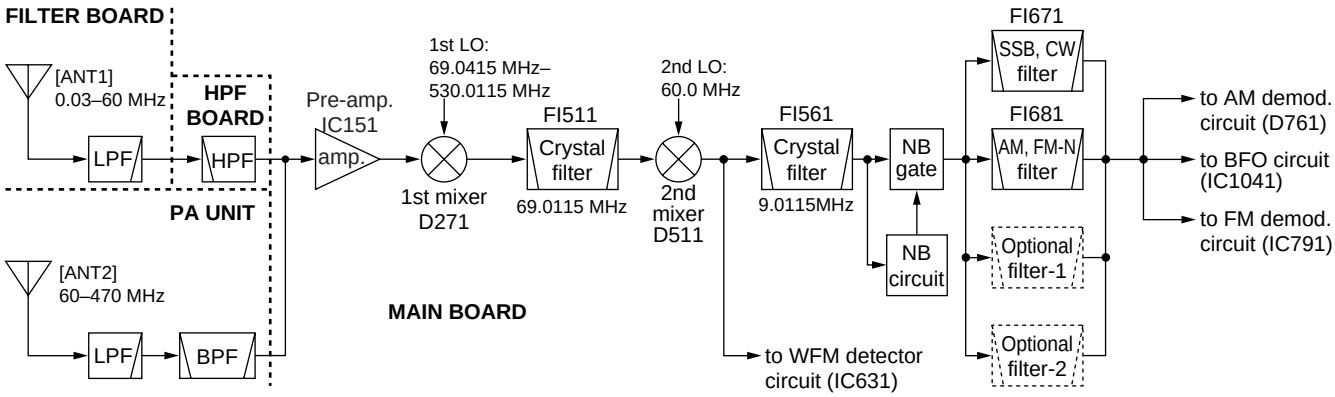

3-1-3 PREAMPLIFIER CIRCUIT (MAIN BOARD)

The preamplifier circuit in the IC-706MKIIG has approx. 15dB gain over a wide-band frequency range.

When the preamplifier is turned ON, the signals from the RF circuit are applied to the preamplifier (IC151) via D2182. Amplified or bypassed signals are applied to the 1st mixer circuit (D271).

3-1-4 1ST MIXER CIRCUIT (MAIN BOARD)

The 1st mixer circuit mixes the receive signals with the 1st LO signal to convert the receive signal frequencies to a 69 or 70.7 MHz 1st IF signal.

The signals from the preamplifier circuit, or signals which bypass the preamplifier, are passed through a low-pass filter and then applied to the 1st mixer (D271).

The 1st LO signals (69.0415–539.0115 MHz) enter the MAIN board from the PLL unit via J281. The LO signal is amplified at IC281, filtered by a low-pass filter, and then, applied to the 1st mixer.

• 1st IF frequency

Mode	1st IF
SSB/AM-N/FM	69.0115 MHz
AM/FM-N	69.0100 MHz
CW	69.0106 MHz
RTTY	69.0105 MHz
WFM	70.7000 MHz

3-1-5 1ST IF CIRCUIT (MAIN BOARD)

The 1st IF circuit filters and amplifies the 1st IF signals. The 1st IF signals are applied to a Crystal Filter (FI511) to suppress out-of-band signals.

The 69 MHz 1st IF signals (except WFM) pass through the crystal filter (FI511), however, the 70.7 MHz 1st IF signal (WFM) passes through a bandpass filter (L501–L505, C501–C506). Then the filtered signals are applied to the IF amplifier (IC521).

The AGC voltage is supplied to the transmit/receive switching circuit (D521, D522) and D521/D522 function as PIN attenuators for AGC operation.

The amplified signals are then applied to the 2nd mixer circuit (D551) via the bandpass filter (L542–L546, C542–C545).

3-1-6 2ND MIXER CIRCUIT (MAIN BOARD)

The 2nd mixer circuit mixes the 1st IF signals and 2nd LO signal (60.00 MHz) to convert the 1st IF to a 2nd IF.

The 1st IF signals from the band pass filter (L542–L546, C542–C545) are converted to 9 MHz or 10.7 MHz 2nd IF signals at the 2nd mixer (D551).

The 2nd IF signals are applied to the bandpass filter (FI561) to suppress undesired signals, such as the 2nd LO signal, and are then applied to the noise blanker gate (D561, D562).

• 2nd IF frequency

Mode	2nd IF
SSB/AM-N/FM	9.0115 MHz
AM/FM-N	9.0100 MHz
CW	9.0106 MHz
RTTY	9.0105 MHz
WFM	10.7000 MHz

While in WFM mode, the IF signals pass through the low-pass filter (L601, C601–C603), IF amplifiers (Q601, Q611), ceramic filter (FI611). The signals are then applied to the WFM demodulator circuit (IC631).

3-1-7 NOISE BLANKER CIRCUIT (MAIN BOARD)

The noise blanker circuit detects pulse type noise, and turns OFF the signal line when noise appears.

A portion of the signals from FI561 are amplified at the noise amplifiers (Q621, Q632, amplifier section of IC631), then detected at the noise detector (D632) to convert the noise components to DC voltages.

The converted voltages are then applied to the noise blanker switch (Q634, Q635). At the moment the detected voltage exceeds Q634's threshold level, Q635 outputs a blanking signal to close the noise blanker gate (D561, D562) by applying reverse-biased voltage.

The detected voltage from D632 is also applied to the noise blanker AGC circuit (Q631, Q633) and is then fed back to the noise amplifier (IC631) as a bias voltage. The noise AGC circuit prevents closure of the noise blanker gate for long periods by non-pulse-type noise. The time constant of the noise blanker AGC circuit is determined by R637.

The 2nd IF signals from the noise blanker gate are then applied to the 2nd IF circuit.

3-1-8 2ND IF CIRCUIT

The 2nd IF circuit amplifies and filters the 2nd IF signals.

The 2nd IF signals from the noise blanker gate (D561, D562) are amplified at the IF amplifier (IC571) via the Tx/Rx switch (D572) and applied to a 2nd IF filter as shown below.

The filtered or bypassed signals are applied to the buffer amplifier (Q721), IF amplifiers (Q731, Q741) and buffer amplifier (Q751) to obtain a detectable level at the demodulator circuit

• Used 2nd IF filter

Mode	Used filter	Control signal
SSB, CW, RTTY AM nar.	FL-272 (FI671)	2F23
AM, FM nar.	FL-94 (FI681)	2F80
FM	Bypassed	2FTH
SSB nar.	Optional FL-223	OP1 or OP2
CW nar., RTTY nar.	Optional FL-100, FL101, FL-223, FL-232	OP1 or OP2
SSB wide, CW wide, RTTY wide	Optional FL-103	OP1 or OP2

The amplified signals from the buffer amplifier (Q751) are shared between the SSB/CW/RTTY detector (IC841), AM detector (D761) and AGC detector (D771). Output signals from the buffer amplifier (Q721) are applied to the FM IF IC (IC791).

3-1-9 IF SHIFT CIRCUIT (MAIN BOARD)

The IF shift circuit shifts the center frequency of IF signals to electronically shift the center frequency.

The IF shift circuit shifts the 1st LO and BFO within ±1.2 kHz in SSB/CW/RTTY modes or ±250 Hz in CW-N/RTTY-N modes. As a result, the 2nd IF (also 1st IF) is shifted from the center frequency of the 2nd IF filter (FI671, FI681 or optional IF filters). This means 2nd IF signals do not pass through the center of the 2nd IF filter. Therefore, the higher or lower frequency components of the IF are cut out. Since the BFO frequency is also shifted the same value as the 1st IF, frequency is corrected at the detector.

In the IC-706MKIIG, the 1st LO frequency is shifted to change the 2nd IF because a fixed 2nd LO frequency (60 MHz) is used. The 1st IF filter (FI671) and crystal filter (FI561) have 15 kHz pass-band widths, and do not affect IF shift operation.

3-1-10 AGC CIRCUIT (MAIN BOARD)

The AGC (Automatic Gain Control) circuit reduces IF amplifier gain to keep the audio output at a constant level. The receiver gain is determined by the voltage on the AGC line (Q776 collector).

The 2nd IF signal from the buffer amplifier (Q751) is detected at the AGC detector (D771) and applied to the AGC amplifier (IC811b). IC811b sets the receiver gain with the [RF/SQL] control via the “RFGV” signal line.

When receiving strong signals, the detected voltage increases and the AGC voltage decreases via the DC amplifier (Q776). The AGC voltage is used for the bias voltage of the transmit/receive switching PIN diodes (D521, D522, D572, D573) to attenuate the received signals.

When AGC slow is selected, C775 and R778 are connected in parallel to obtain appropriate AGC characteristics.

• AGC CIRCUIT

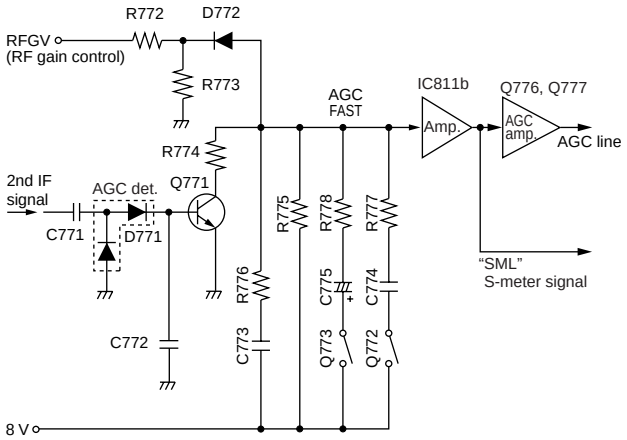

3-1-11 S-METER CIRCUIT (MAIN BOARD)

The S-meter circuit indicates the relative received signal strength while receiving by utilizing the AGC voltage which changes depending on the received signal strength.

The output voltage of the AGC amplifier (IC811b, pin 7) is applied to the main CPU (IC2001, pin 36) as an S-meter signal via the analog switch (IC2101, pins 5, 3) as the “SML” signal. The FM S-meter signal from the FM IF IC (IC791, pin 12) is also applied to the analog switch (IC2101, pin 5) via the meter amplifier (Q774).

The S-meter signal from the main CPU (IC2001) is applied to the sub CPU and is then displayed on the S-meter readout.

3-1-12 SQUELCH CIRCUIT (MAIN BOARD)

The squelch circuit mutes audio output when the S-meter signal is lower than the [RF/SQL] control setting level.

The S-meter signal is applied to the main CPU (IC2001, pin 36) in SSB/CW/RTTY modes and is compared with the threshold level set by the [RF/SQL] control. The [RF/SQL] setting is picked up at the sub CPU (DISPLAY board; IC1, pin 99). The main CPU compares the S-meter signal and [RF/SQL] setting, and controls the AF selector switch (IC861) to cut out AF signals via IC2122a.

In FM mode, a portion of the AF signals from the FM IF IC (IC791, pin 9) are applied to the active filter section (pin 8) where noise components above 20 kHz are amplified. The signals are rectified at the noise detector section and then output from pin 14. The noise squelch signal from pin 14 is applied to the main CPU (IC2001, pin 31) via the analog switch (IC2101, pins 14, 13) as the “NSQL” signal. The CPU then controls the AF selector switch (IC861).

3-1-13 DEMODULATOR CIRCUITS (MAIN BOARD)

(1) SSB/CW/RTTY modes

The 2nd IF signals from the buffer amplifier (Q751) are mixed with the BFO signal from the PLL unit at the product detector (IC841, pin 6). The detected AF signals from IC841 (pin 1) are applied to the AF selector switch (IC861, pin 12).

(2) AM mode

The 2nd IF signals from the buffer amplifier (Q751) are detected at the AM detector (D761). The detected AF signal is applied to the AF selector switch (IC861, pin 15).

(3) FM/FM NARROW modes

The 2nd IF signals from the buffer amplifier (Q721) are applied to the FM IF IC (IC791, pin 16) where the IF signals are converted into 455 kHz IF signals. The signals pass through FI791 and are applied to the quadrature detector section. X791 is used for quadrature detector. The detected AF signals from pin 9 are then applied to the AF selector switch (IC861, pin 14) via the de-emphasis circuit (IC811a).

(4) WFM mode

The 2nd IF signals from the IF amplifier (Q611) are applied to the WFM demodulator circuit (IC631, pins 2, 3) where the IF signals are converted into AF signals. The detected AF signals from pin 8 are then applied to the AF selector switch (IC861, pin 11).

3-1-14 AF SELECTOR SWITCH (MAIN BOARD)

The AF signals from one of the detector circuits are applied to the AF selector switch (IC861). IC861 consists of dual 4-channel analog switches which are selected with a mode signal and the squelch control signal.

• AF selector switch

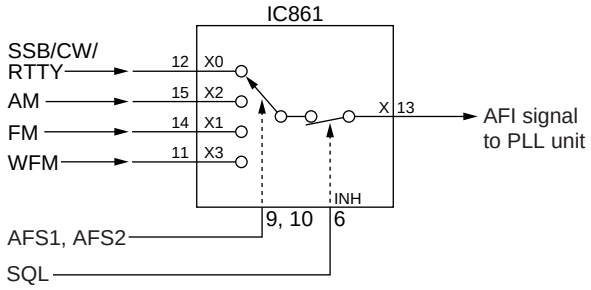

3-1-15 AF AMPLIFIER CIRCUIT (PLL UNIT)

The AF amplifier amplifies the demodulated signal to a suitable driving level for the speaker.

The AF signals from the AF selector switch (MAIN board; IC861) are applied to the PLL unit via the “AFI” signal line. The CW side tone/beep tone and optional synthesized voice are also applied to the PLL unit via the “AFBP” signal line.

The AF signals from the MAIN board are applied to the VCA (Voltage Controlled Amplifier) circuit (IC201). The AF gain setting from the main CPU is converted to DC voltage at the D/A converter (MAIN board IC2201) and applied to the VCA control terminal (IC201, pin 8) via the “AFGC” signal line. The output AF signal from IC201 (pin 9) is power-amplified at IC231 to drive the speaker.

3-2 TRANSMITTER CIRCUITS

3-2-1 MICROPHONE AMPLIFIER CIRCUIT (MAIN BOARD)

The microphone amplifier circuit amplifies microphone input signals and outputs the amplified signals to the balanced modulator or FM modulation circuit.

• Microphone amplifier

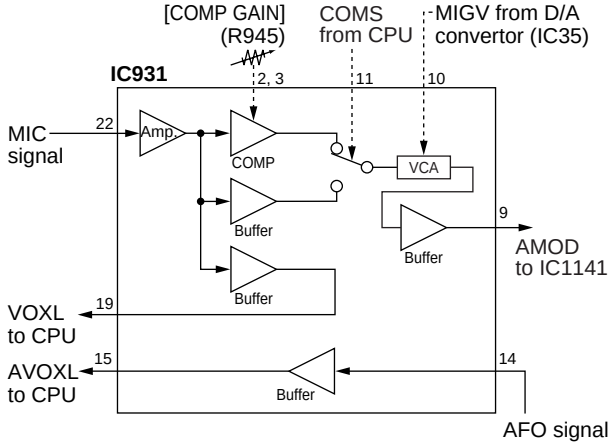

Audio signals from the front or rear panel [MIC] connector enter the microphone amplifier IC (IC931, pin 22) and are then amplified at the microphone amplifier or speech compressor section. Compression level is adjusted with the [COMP GAIN] control (R945).

The amplified or compressed signals are applied to the VCA section of IC931. The microphone gain setting from the D/A converter (IC2201, pin 2) is applied to the VCA control terminal (IC931, pin 10). The resulting signals from pin 9 are then applied to the buffer amplifier (Q961) via the analog switch (IC1141). External modulation input from the [ACC] socket (pin 11) is also applied to Q961.

While in SSB mode, the amplified signals from the buffer amplifier (Q961) are passed through the AF selector switch (IC971) and are then applied to the balanced modulator (IC1041).

While in AM/FM mode, the amplified signals from the buffer amplifier (Q961) are applied to the limiter amplifier (IC981a) and splatter filter (IC981b). The signals are then applied to the AF selector switch (IC971) in AM mode or to the varactor diode (D1012) in FM mode.

3-2-2 VOX CIRCUIT (MAIN BOARD)

The VOX (Voice-Operated-Transmission) circuit sets transmitting conditions according to voice input.

When the VOX function is activated, the microphone signals from IC931 (pin 19) are applied to the VOX comparator section in the main CPU (IC2001, pin 32) via the VOXL line.

A portion of the power amplified AF signals from the AF power amplifier (PLL unit; IC231) are amplified at the buffer amplifier (IC931, pins 14, 15) and applied to the anti-VOX comparator section in the main CPU (IC2001, pin 33) via the AVXL line.

Then the main CPU compares these and controls the transmitter circuit.

3-2-3 BALANCED MODULATOR (MAIN BOARD)

The balanced modulator converts the AF signals from the microphone amplifier to a 9 MHz IF signal with a BFO (Beat Frequency Oscillator) signal.

Microphone signals from the AF selector switch (IC971) are applied to the balanced modulator (IC1041, pin 1). The BFO signal from the PLL unit is applied to IC1041 (pin 10) as a carrier signal.

IC1041 is a double balanced mixer IC and outputs a double side band (DSB) signal with –40 dB of carrier suppression. R1045 adjusts the balanced level of IC1041 for maximum carrier suppression. The resulting signal passes through a 9 MHz IF filter (FI671 in SSB/CW/RTTY modes) to suppress unwanted side-band signals.

In AM mode, R1042 is connected to upset the balance of IC1041 via Q1041 for leaking the BFO signal as a carrier signal. The CW keying/RTTY TX signal is applied to IC1041 pin 1.

3-2-4 FM MODULATION CIRCUIT (MAIN BOARD)

The microphone signals from Q961 are applied to the limiter amplifier (IC981a) and the splatter filter (IC981b). The 1750 Hz European tone signal from the main CPU (IC2001 pin 40) is also applied to IC981a pin 2 for European repeaters. The sub-audible tone signal (67.0–254.1 Hz) from the main CPU (IC2001 pin 37) is also applied to IC981b pin 5 for repeater use.

The resulting signals are applied to the VCO circuit (Q1011, D1012) via R1002 to change the reactance of the varactor diode (D1012) for FM modulation. The modulated signal is amplified at the buffer amplifier (Q1013) and bypasses the 9 MHz IF filter.

3-2-5 TRANSMITTER IF CIRCUIT (MAIN BOARD)

The 9 MHz IF signal from the modulation circuit passes through the 9 MHz IF filter (FI671 in SSB/CW/RTTY modes; FI681 in AM/FM-N modes; through in FM mode). The signal is amplified at IC571, and then passes through the total gain adjustment volume (R579), and the crystal filter (FI561). The signal is then applied to the 2nd mixer (D551).

The signal is mixed with the 2nd LO signal (60 MHz) and converted to a 69 MHz IF signal at the 2nd mixer (D551). The 69 MHz IF signal passes through a bandpass filter, IF amplifier (IC521) and 69 MHz IF filter (FI511), and is then converted to the displayed frequency at the 1st mixer (D271) with the 1st LO signal. The mixers (D271, D551) and IF amplifiers (IC521, IC571) are used commonly for both receiving and transmitting.

The ALC voltage is supplied to the transmit/receive switching circuit (D521/D522 and D572/D573). D521/D522 and D572/D573 function as PIN attenuators for ALC operation.

3-2-6 RF CIRCUIT (PA UNIT, MAIN AND HPF BOARD)

The RF circuit amplifies the displayed frequency signal to obtain 100 W of RF output power for HF/50 MHz bands and 50 W for the 144 MHz band, 20 W for the 440 MHz band.

The HF/50 MHz RF signals from the 1st mixer (D271) via the low-pass filter enter the HPF board and then pass through one of 8 high-pass filters (Refer to 3-1 for used RF high-pass filter). The 50 MHz RF signals pass through a low-pass filter additionally. The filtered signals return to the MAIN board, are amplified at the YGR amplifier (IC231), and are then applied to the PA unit.

The 144 MHz RF signals from the 1st mixer (D271) via the low-pass filter (L251–253, C253–259) bypass the filters and pass through the bandpass filter (L182–L184, L195, L196, C181–C186, C195–C197) in the MAIN board. The signals are amplified at the RF amplifier (IC221) and YGR amplifer (IC231) and are then applied to the PA unit.

The 440 MHz RF signals from the 1st mixer (D271) via the low-pass filter (L251–253, C253–259) are amplified at RF amplifier (IC222) and passed through the bandpass filter (FI371–FI373) in the MAIN board. The filtered signal is amplified at the YGR amplifer (IC231) and is applied to the PA unit.

The signals from IC231 enter the PA unit and is amplified at the drive amplifiers (Q101, Q121) in sequence. The amplified signals are applied to the band switch (RL1).

The HF/50 MHz RF signals from the band switch (RL1) are amplified at the drive (DRIVER board; Q161) and power (Q171, Q172) amplifiers to obtain a stable 100 W of RF output power. The power-amplified signals are then applied to the [ANT1] connector via one of the 7 low-pass filters in the FILTER board.

For the 144/440 MHz RF signals from the band switch (RL1), 50 W for 144 MHz band or 20 W for 440 MHz band of RF output power is obtained at the drive (DRIVER board; Q211) and power amplifier (Q231). The power-amplified signals are applied to the [ANT2] connector via the antenna switching circuit and low-pass (144 MHz band) or high pass (440 MHz band) filters.

3-2-7 ALC CIRCUIT (MAIN BOARD)

The ALC (Automatic Level Control) circuit reduces the gain of IF amplifiers in order for the transceiver to output a constant RF power set by the RF power setting even when the supplied voltage shifts, etc.

The HF/50 MHz RF power signal level is detected at the power detector (FILTER board; D9), buffer-amplified at IC1b and applied to the MAIN board as the “HFOR” voltage.

The 144 MHz and 440 MHz RF power signals are detected at the power detectors (PA unit; D262, D263) and (PA unit; D312, D313) respectively. The detected signals are applied to the MAIN board as the “VFOR” or “UFOR” voltages.

• TRANSMITTER CONSTRUCTION

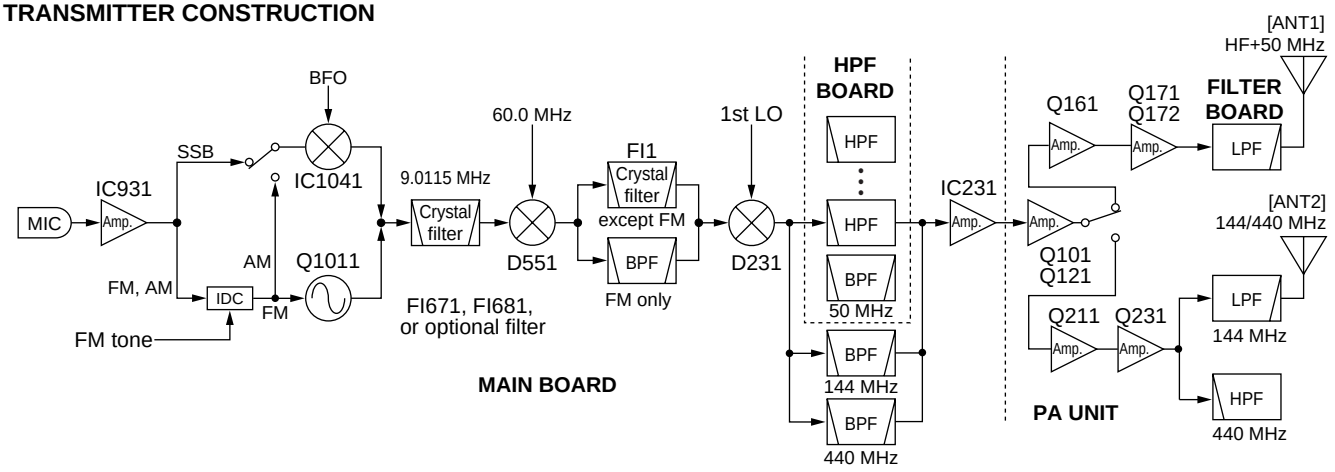

The “FOR”, “VFOR” and “UFOR” voltages are combined to the “FORL” voltage and then applied to IC1091b (pin 6). The “POCV” voltage from the D/A converter (IC2201, pin 3), determined by the RF power setting, is applied to IC1091b (pin 5) as the reference voltage.

When the “FORL” voltage exceeds the “POCV” voltage, ALC bias voltage from IC1091a (pin 1) controls the PIN diodes (D521, D522, D572, D573) using Q1092. This adjusts the output power to the level determined by the RF power setting until the “FORL” and “POCV” voltages are equalized.

In AM mode, IC1091a operates as an averaging ALC amplifier with Q1091 and C1091. Q1071 turns ON and the “POCV” voltage is shifted for 40 W AM output power (maximum, 20 W for 144 MHz band, 8 W for 440 MHz band) through R1080.

The ALC bias voltage from IC1091a is also applied to the main CPU (IC2001 pin 34) as the “ALCL” voltage for ALC meter indication.

An external ALC input (minus voltage) from the [ACC] socket (pin 6) is shifted to plus voltage at D1131 and is applied to the buffer amplifier (Q1131). External ALC operation is identical to that of the internal ALC.

3-2-8 APC CIRCUIT (MAIN BOARD)

The APC (Automatic Power Control) circuit protects the power amplifiers on the PA unit from high SWR and excessive current for the HF/50 MHz band.

The reflected wave signal appears and increases on the antenna connector when the antenna is mismatched. The HF/50 MHz reflected signal level is detected at D10 (FILTER board), and is amplified at the APC amplifier (IC1091c) and applied to the ALC circuit as the reference voltage.

For the current APC, the driving current at the power amplifier is detected in the voltages (“ICH” and “ICL”) which appear at both terminals of a 0.012 Ω resistor (R201) on the PA unit. The detected voltages are applied to the differential amplifier (IC1091d, pins 13, 12). When the current of the power amplifier exceeds 22 A, IC1091d controls the ALC line via IC1091a to prevent excessive current flow.

3-2-9 RF, ALC, SWR METER CIRCUITS (MAIN BOARD)

While transmitting, RF, ALC or SWR meter readings are available and can be selected with the [MET] switch.

(1) Power meter

The “FOR”, “VFOR” and “UFOR” voltages are combined to the “FORL” voltage, and it is then applied to the main CPU (IC2001, pin 35) via the analog switch (IC2101, pins 11, 13) for indicating the output power.

(2) ALC meter

The ALC bias voltage from IC1091a pin 1 is applied to the main CPU (IC2001, pin 34) via the “ALCV” signal line for indicating the ALC level.

(3) SWR meter

The “FORL” and “REFL” voltages are applied to the main CPU (IC2001, pins 32 and 36) via the analog switch (IC2101, pins 11, 13 and 4, 3) respectively. The main CPU compares the ratio of “FORV” to “REFV” voltage and indicates the SWR for the [ANT1] connector.

3-3 PLL CIRCUITS

3-3-1 GENERAL

The PLL unit generates a 1st LO frequency (69.0415–530.0115 MHz), a 2nd LO frequency (60 MHz), a BFO frequency (9.01 MHz), an FM 3rd LO frequency (9.4665/9.4650 MHz) and a TX FM PLL reference frequency (9.0115/9.0100 MHz).

The 1st LO PLL adopts a mixer-less dual loop PLL system and has 3 VCO circuits. The BFO uses a DDS and the 2nd LO uses a fixed frequency double that of the crystal oscillator.

3-3-2 1ST LO PLL CIRCUIT

The 1st LO PLL contains a main loop and reference loop forming a dual loop system.

The reference loop generates a 10.6605 to 10.683 MHz frequency using a DDS circuit, and the main loop generates a 69.0415 to 269.50575 MHz frequency using the reference loop frequency.

While operating on 60 MHz and above, the output is doubled at D531 for oscillating a wide frequency range.

(1) REFERENCE LOOP PLL

The oscillated signal at the reference VCO (Q1, D1) is amplified at the amplifiers (Q21, Q51) and is then applied to the DDS IC (IC101, pin 46). The signal is then divided and detected on phase with the DDS generated frequency.

The detected signals output from IC101 (pin 56) is converted into a DC voltage (lock voltage) at the loop filter (R133, R134, C133) and then fed back to the varactor diode (D1) in the VCO circuit.

(2) MAIN LOOP PLL

The oscillated signal at one of the main loop VCOs (Q301, Q331, Q361) is amplified at the buffer amplifiers (Q10) and is then applied to the PLL IC (IC461, pin 6). The signal is then divided and detected on phase with the reference loop output frequency.

The detected signal output from the PLL IC (IC461, pin 2) is converted into a DC voltage (lock voltage) at the active loop filter and then fed back to one of the varactor diodes (D301, D331, D361) in the VCO circuits. While operating on 60 MHz and above, the VCO output is doubled at the doubler circuit (D531) and amplified at the ampolifier (IC541).

The oscillated signal passes through a low-pass or band-pass filter and is then applied to the MAIN board as a 1st LO signal.

3-3-3 2ND LO AND REFERENCE OSCILLATOR CIRCUITS

The reference oscillator (X621, Q621) generates a 30.0 MHz frequency used for the 1st LO and BFO circuits as a system clock and for the 2nd LO signal.

The oscillated signal is amplified at the buffer amplifier (Q661), and is doubled at Q681 and the 60 MHz frequency is picked up at the bandpass filter (L681, L682). The 60 MHz signal is applied to the MAIN board as a 2nd LO signal.

3-3-4 BFO CIRCUIT

The DDS IC (IC901) generates a 10-bit digital signal. The signal is converted into an analog wave signal at the D/A converter (R951–R970). The analog wave is passed through the high-pass filter and low-pass filter. The 9 MHz BFO signal is then applied to the MAIN board via the “BFO” signal line.

While transmitting in RTTY mode, the RTTY keying signal is applied to IC901 pin 3 to shift the generated frequency and to obtain 2 frequencies for FSK operation.

While receiving in FM or FM narrow mode, the BFO circuit generates a 9.4665 MHz frequency as the 3rd LO signal.

While transmitting in FM or FM narrow mode, the BFO circuit generates a 9.0115 MHz or 9.0100 MHz frequency as the TX FM PLL reference frequency, respectively.

• FREQUENCY CONSTRUCTION

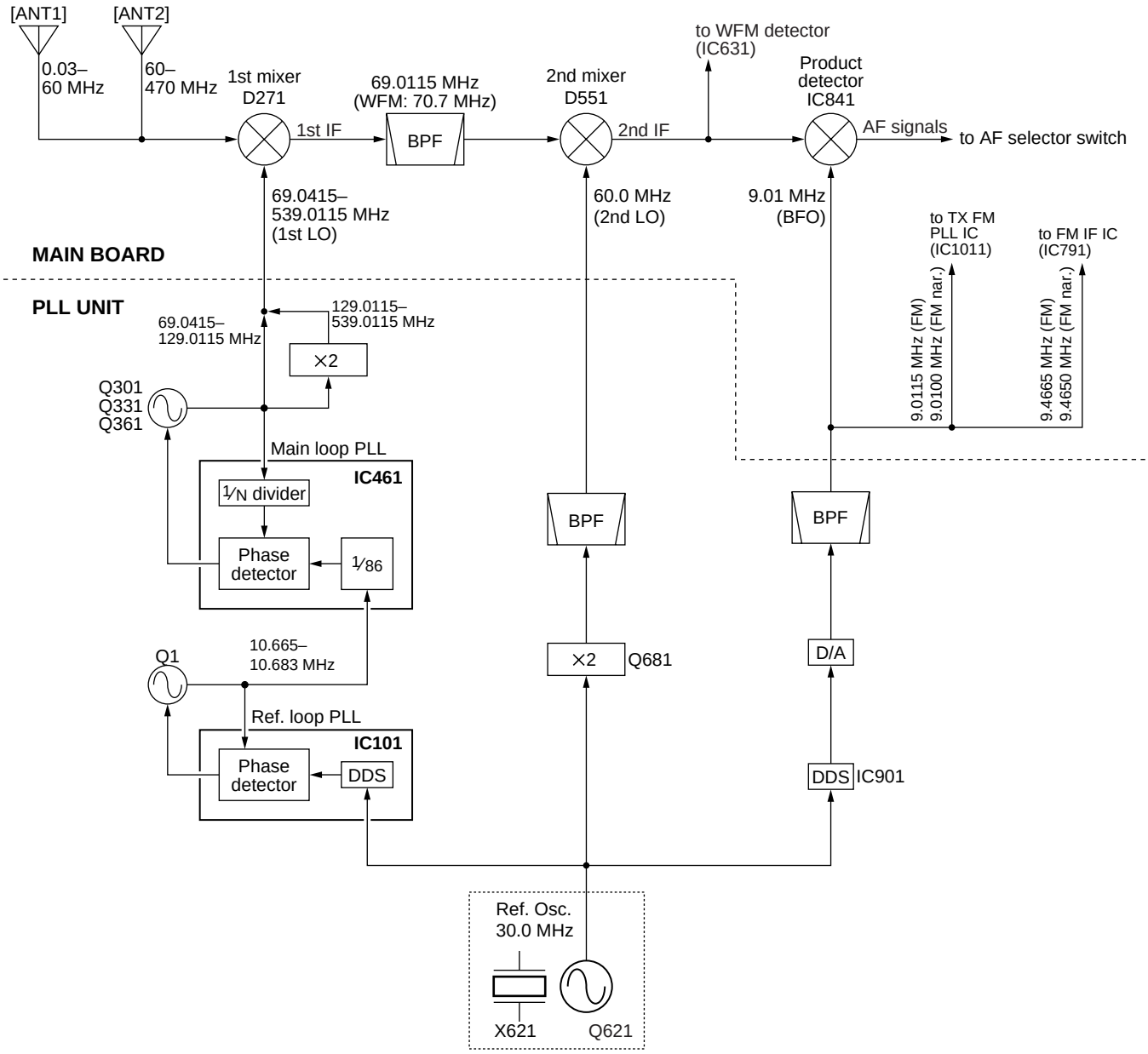

• **BFO frequency**

Mode	RX BFO/3rd LO frequency [MHz]	TX BFO/FM PLL ref. frequency [MHz]
USB	9.0130	9.0130
LSB	9.0100	9.0100
CW	9.0106 (–CW pitch frequency)	9.0106 (–CW pitch frequency)
CW-R	9.0106 (+CW pitch frequency)	9.0106 (+CW pitch freqency)
RTTY	9.008375 (2125 Hz tone) 9.008885 (1615 Hz tone)	9.0105 (MARK)
AM	No output	9.0100
FM	9.4665 (3rd LO)	9.0115 (PLL ref.)
FM nar.	9.4650 (3rd LO)	9.0100 (PLL ref.)
WFM	No output	No output

IF shift: Center, RTTY: Normal polarity

3-4 LOGIC CIRCUITS

3-4-1 BAND SELECTION DATA (MAIN BOARD AND PLL UNIT)

To select the correct RF low-pass filter, high-pass filter and VCOs on the PLL unit, the CPU outputs the following band selection data from the I/O expander (MAIN board; IC2231, IC2232), the D/A converter (MAIN board; IC2201) or DDS IC (PLL unit; IC101) depending on the display frequency.

The D/A convertor output from IC2201 (pin 18) is doubled at IC891d to obtain the band voltage for external equipment.

• **Band selection data**

Frequency [MHz]	IC2231, IC2232 (MAIN)		IC2201 (MAIN)	IC101 (PLL)	
	HPF BPF	LPF LPF	1/2 band voltage	VCO	LPF BPF
0.03– 1.999999	L1	L1	3.70 V	VCO1	LOF1
2.0– 3.999999	L2	L2	3.19 V		
4.0– 7.999999	L3	L3	2.68 V		
8.0– 10.999999	L4	L4	0 V		
11.0– 14.999999			2.18 V		
15.0– 21.999999	L5	L5	1.69 V		
22.0– 29.999999	L6	L6	1.19 V		
30.0– 39.999999	B7W	L7	0.96 V	VCO2	LOF2
40.0– 59.999999	B7				
60.0–128.999999	B8	L8		VCO1	LOF3
129.0–143.999999				VCO2	LOF4
144.0–148.000000					LOF5
148.000001–199.999999					LOF4
400.000000–470.000000	B9	B9		VCO3	LOF6

3-4-2 SUB CPU PORT ALLOCATIONS (DISPLAY board; IC1)

Pin number	Port name	Description
1	SFTL	Input port for the [SHIFT] control.
18	PTTS	Outputs a PTT signal. Low : While transmitting.
19, 20	BU1S, BU2S	Outputs displaly backlight control signal.
80	PHNK	Input port for the [PHONES] jack connection detection. High : When the headphone or external speaker is connected to the [PHONES] jack.
81	RSK	Input port for the [RIT] switch.
96	PTTL	Input port for the [PTT] switch on the microphone.
97	FUDL	Input port for the microphone up/down signal.
98	AFGL	Input port for the [AF] control.
99	SQLL	Input port for the [RF/SQL] control.

3-4-3 I/O EXPANDER PORT ALLOCATIONS (MAIN board; IC2221)

Pin number	Port name	Description
4	MODS	Outputs select signal for the Tx AF selector switch (IC1141). Hign : When AM and SSB modes are selected.
5	AMS	Outputs AM mode select signal. High : When AM mode is selected.
6	FMS	Outputs FM and FM-N modes select signal. High : When FM and FM-N modes are selected.
7	WFMS	Outputs WFM mode select signal. High : When WFM mode is selected.
11, 12	AFS1, AFS2	Output select signals for the Rx AF selector switch (IC861).

PORT	MODE			
	WFM	FM	AM	SSB/CW/RTTY
AFS1	High	High	Low	Low
AFS2	High	High	Low	Low

Pin number	Port name	Description
13	UNFM	Outputs non-FM mode select signal. High : When SSB/CW/RTTY/AM modes are selected.
14	MINH	Outputs an audio mute signal for the analog switch (IC971). High : While transmitting in CW/RTTY modes.

3-4-4 MAIN CPU PORT ALLOCATIONS
(MAIN unit; IC2001)

Pin number	Port name	Description
13	DASK	Input port for the external paddle (DASH). Low : During key down
14	DOTK	Input port for the external paddle (DOT) or straight key. Low : During key down
15	UNLK	Input port for the PLL unlock signal from the DDS IC (PLL unit; IC101) and PLL IC (PLL unit; IC461). Low : while PLL unlock
16	TKEY	Input port for transmit control signal from the optional AT-180/AH-4 antenna tuners.
17	TCON	Input port for the optional antenna tuner connection detection. High : When the optional antenna tuner is connected.
18	SQSS	Outputs a squelch control signal for the external unit.
19	PWK	Input port for the [POWER] switch. Low : When the [POWER] switch is pushed.
20	POWS	Outputs the switching relay (PA unit; RL591) control signal. High : While power is ON.
21	ATST	Outputs start signal for the optional AT-180 antenna tuner.
22	BEEP	Output port : Beep audio signals while receiving. : CW side tone signals while transmitting.
23	AHST	Outputs start signal for the optional AH-4
24	AFMS	Outputs squelch mute control signal, applied to the AF mute switch (MAIN board; Q772). Low : While squelch is closed.
30	CTCV	Input port for the CTCSS decode signal from the low-pass filter (IC811C).
31	SNDL	Input port from the [RTTY] or [MIC] connector. High : While transmitting.
32	VOXL	Input port for the VOX voltage.
33	AVXL	Input port for the anti-VOX voltage.
34	ALCV	ALC level input port for the ALC meter indication.
37	TONE	Outputs subaudible tone signals.
39	SPBK	Input port for the optional UT-102 (Voice synthesizer unit) activation signal. High : During speech synthesis.

(MAIN unit; IC2001)–Continued

Pin number	Port name	Description
40	ETON	Outputs 1750 Hz European tone signal.
41	MSST	Outputs a strobe signal for the optional UT-102 (Voice synthesizer unit).
42	MDT	Outputs serial data for the I/O expanders, optional AT-180/UT-102.
43	MCK	Outputs a clock signal for the I/O expanders, optional AT-180/ UT-102.
44	BSTB	Outputs a strobe signal for the I/O expander ICs (IC2231, IC2232).
45	DSST	Outputs a strobe signal for the I/O expander ICs (IC2221, IC2222).
46	ASTB	Outputs a strobe signal for the D/A converter IC (IC2201).
48	PBST	Outputs a strobe signal for the BFO DDS IC (PLL unit; IC901).
49–51	CON2–CON0	Output mode control signals for the 1st LO DDS IC (PLL unit; IC101).
52	PDST	Outputs a strobe signal for the 1st LO DDS IC (PLL unit; IC101).
53	PMST	Outputs a strobe signal for the 1st LO PLL IC (PLL unit; IC461).
54	PDT	Outputs serial data for the DDS ICs (PLL unit; IC101, IC901) and PLL IC (PLL unit; IC461).
55	PCK	Outputs a clock signal for the DDS ICs (PLL unit; IC101, IC901) and PLL IC (PLL unit; IC461).
61	AFGS	Outputs AGC rate select signal Low : When AGC fast is selected.
62	NBS	Outputs the NB switch (Q635) control slignal. High : When the [NB] is turned ON, except FM/WFM modes.
63	ATTS	Outputs the attenuator circuit control slignal. High : When the [ATT] is turned ON.
71	FMST	Outputs a strobe signal for the TX FM PLL IC (IC1011).
74	SNDS	Input port for transmit/receive switching signals for the [ACC] connector. Low : While transmitting.
75	KDS	Outputs a CW keying signal or RTTY TX signal.
78	LTXD	Output port for CI-V bus line.
79	LRXD	Input port for CI-V bus line.

SECTION 4 ADJUSTMENT PROCEDURES

4-1 PREPARATION BEFORE SARVICING

■ REQUIRED TEST EQUIPMENT

EQUIPMENT	GREDE AND RANGE	EQUIPMENT	GREDE AND RENGE
DC power supply	Output voltage : 13.8 V DC Current capacity : 30 A or more	Distortion meter	Frequency range : 1 kHz ±10 % Measuring range : 1–100 %
RF power meter (terminated type)	Measuring range : 10–200 W Frequency range : 1.8–500 MHz Impedance : 50 Ω SWR : Less than 1.2 : 1	Oscilloscope	Frequency range : DC–100 MHz Measuring range : 0.01–10 V
		Digital multimeter	Imput impeadance : 10 MΩ/DC or beter
Frequency counter	Frequency range : 0.1–500 MHz Frequency accuracy : ±1 ppm or better Sensitivity : 100 mV or better	AC millivoltmeter	Measuring range : 10 mV–10 V
		DC voltmeter	Input impedance : 50 kΩ/V DC or better
		DC ammeter	Measurement capability: 1 A/50 A
RF voltmeter	Frequency range : 0.1–500 MHz Measuring range : 0.01–10 V	Audio generator	Frequency range : 300–3000 Hz Measuring range : 1–500 mV
Standard signal generator (SSG)	Frequency range : 0.1–30 MHz Output level : 0.1 µV–32 mV (–127 to –17 dBm)	Spectram analyzer	Frequency range : At least 1000 MHz Spectraum bandwidth : 100 kHz or more
FM deviation meter	Frequency range : 0–500 MHz Measuring range : 0 to ±5 kHz	Attenuator	Power attenuation : 50 or 60 dB Capacity : 150 W or more
Modulation analyzer	Frequency range : At least 500 MHz Measuring range : 0–100 %	External speaker	Input impedance : 8 Ω Capacity : 5 W or more

■ CONNECTIONS

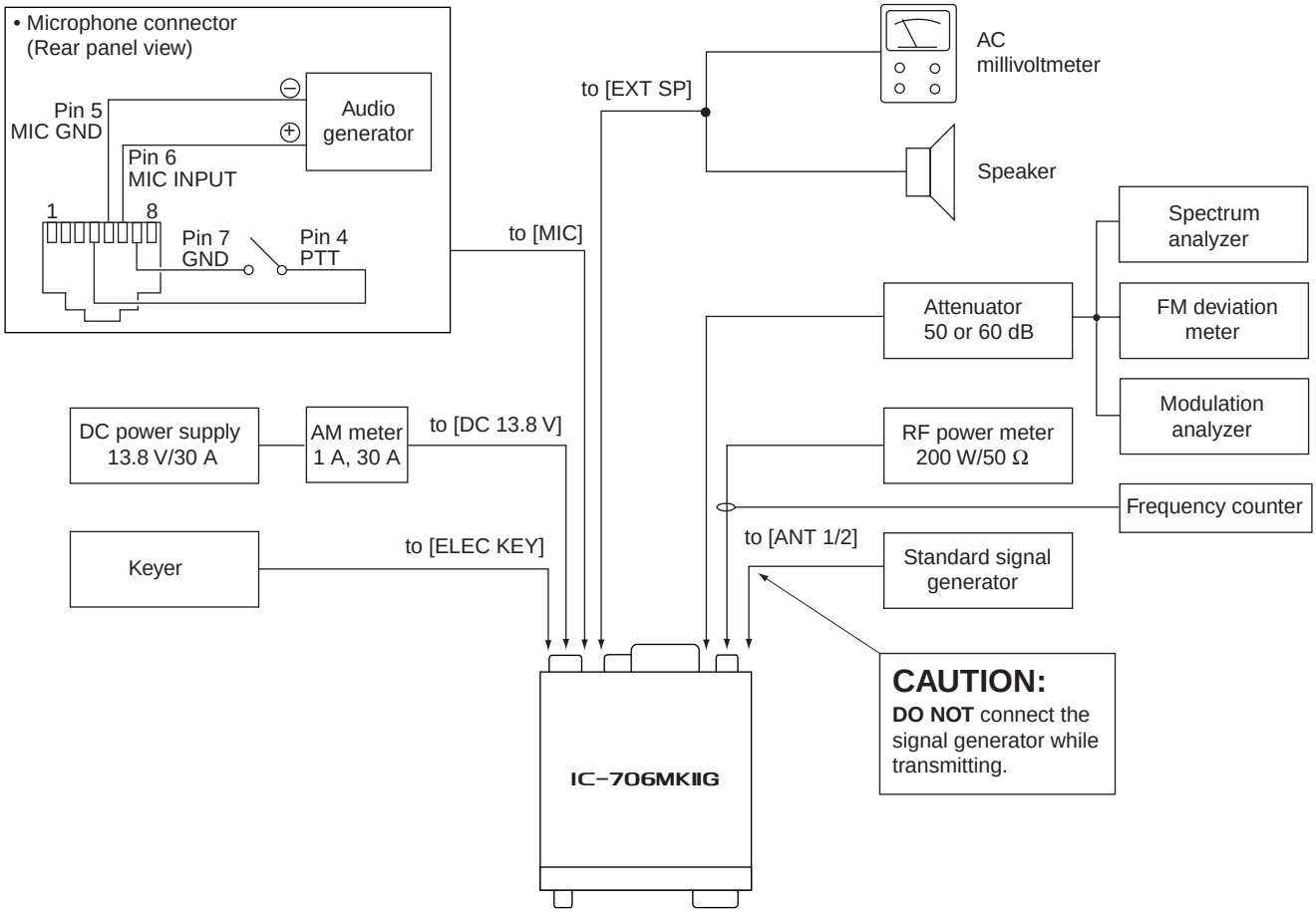

4-2 PLL ADJUSTMENTS

ADJUSTMENT		ADJUSTMENT CONDITION	MEASUREMENT		VALUE	ADJUSTMENT POINT	
			UNIT	LOCATION		UNIT	ADJUST
REFERENCE FREQUENCY	1	• Display frequency: Any • L623 (PLL unit) : Center • Receiving	PLL	Connect an RF voltmeter to check point P681.	Maximum level (0 dB or more)	PLL	L681, L682
	2			Connect a frequency counter to check point P681.	60.000000 MHz		L601 L623 R602
REFERENCE LOOP LOCK VOLTAGE	1	• Display frequency: 0.0300 MHz • Mode : USB • Receiving	PLL	Connect a digital multimeter or oscilloscope to check point CP131.	2.0 V	PLL	C4
MAIN LOOP LOCK VOLTAGE	1	• Display frequency: 128.99999 MHz • Mode : USB • Receiving	PLL	Connect a digital multimeter or oscilloscope to check point CP401.	4.0 V	PLL	C306
	2	• Display frequency: 199.99999 MHz • Mode : USB • Receiving			4.0 V		C335
	3	• Display frequency: 470.00000 MHz • Mode : USB • Receiving			4.0 V		C367

4-3 TRANSMITTER ADJUSTMENTS

ADJUSTMENT		ADJUSTMENT CONDITION	MEASUREMENT		VALUE	ADJUSTMENT POINT	
			UNIT	LOCATION		UNIT	ADJUST
TRANSMIT TOTAL GAIN	1	• Display frequency: 14.10000 MHz • Mode : USB • [Q1 RF POWER] : H • Connect an audio generator to [MIC] connector and set as: 1.5 kHz/3 mV • Transmitting	Rear Panel	Connect an RF power meter to [ANT1] connector.	Maximum RF power	MAIN	L511, L512, L562, L563, L566
	2	• Transmitting			50 W		R579
OUTPUT POWER	1	• Display frequency: 14.10000 MHz • Mode : USB • [Q2 MIC GAIN] : 5 • Connect an audio generator to [MIC] connector and set as: 1.5 kHz/30 mV • Transmitting	Rear Panel	Connect an RF power meter to [ANT1] connector.	100 W	MAIN	R1082
	2	• Display frequency: 52.00000 MHz • Transmitting			100 W		R1084
	3	• Display frequency: 145.00000 MHz • Transmitting		Connect an RF power meter to [ANT2] connector.	50 W		R1086
	4	• Display frequency: 435.00000 MHz • Transmitting			20 W		R1088
CARRIER SUPPRESSION	1	• Display frequency: 14.10000 MHz • Mode : USB and LSB • Apply no signal to [MIC] connector. • Transmitting	Rear Panel	Connect a spectrum analyzer to [ANT1] connector via an attenuator.	Minimum carrier level	MAIN	R1045

• **PLL AND PA UNITS**

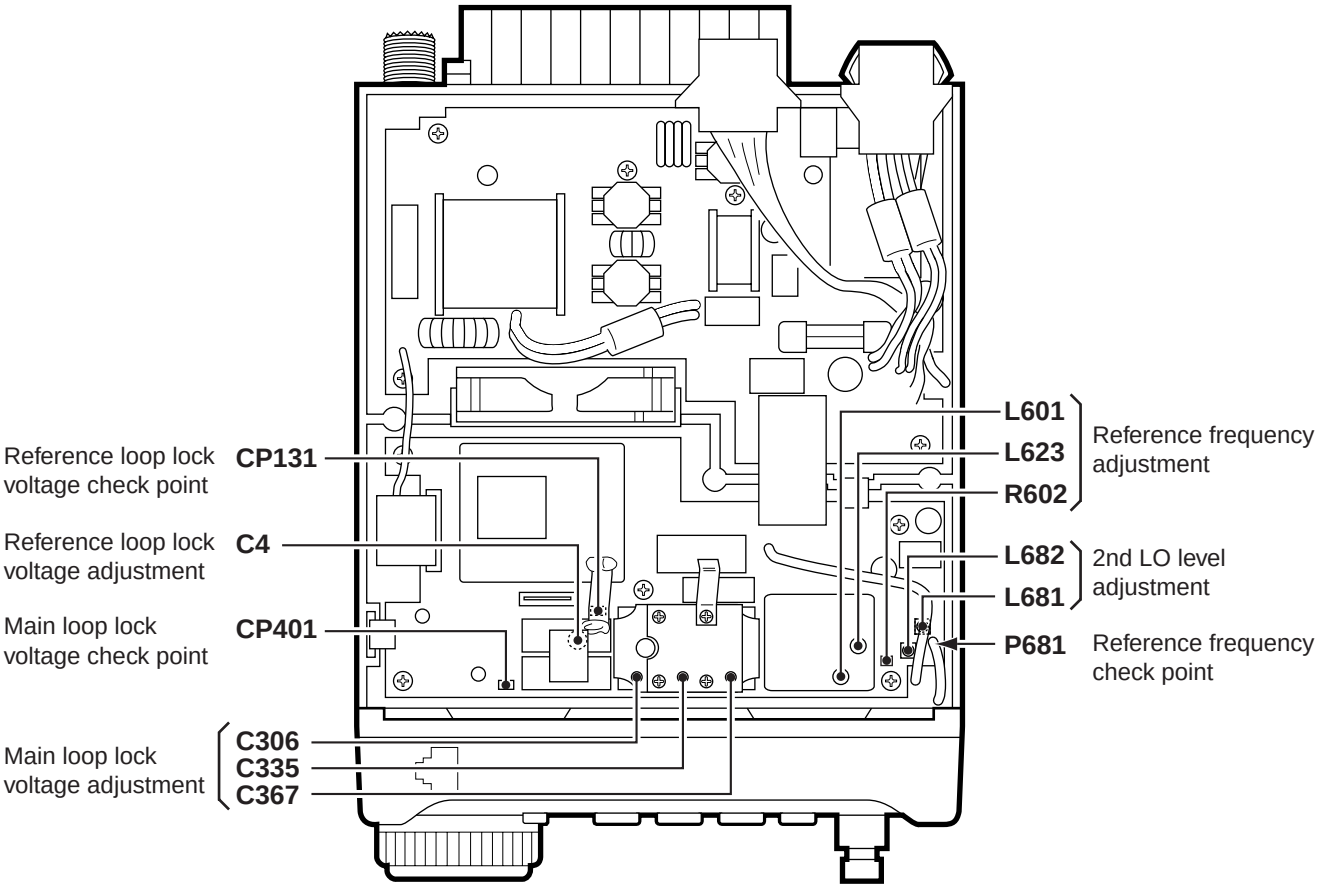

• **MAIN UNIT**

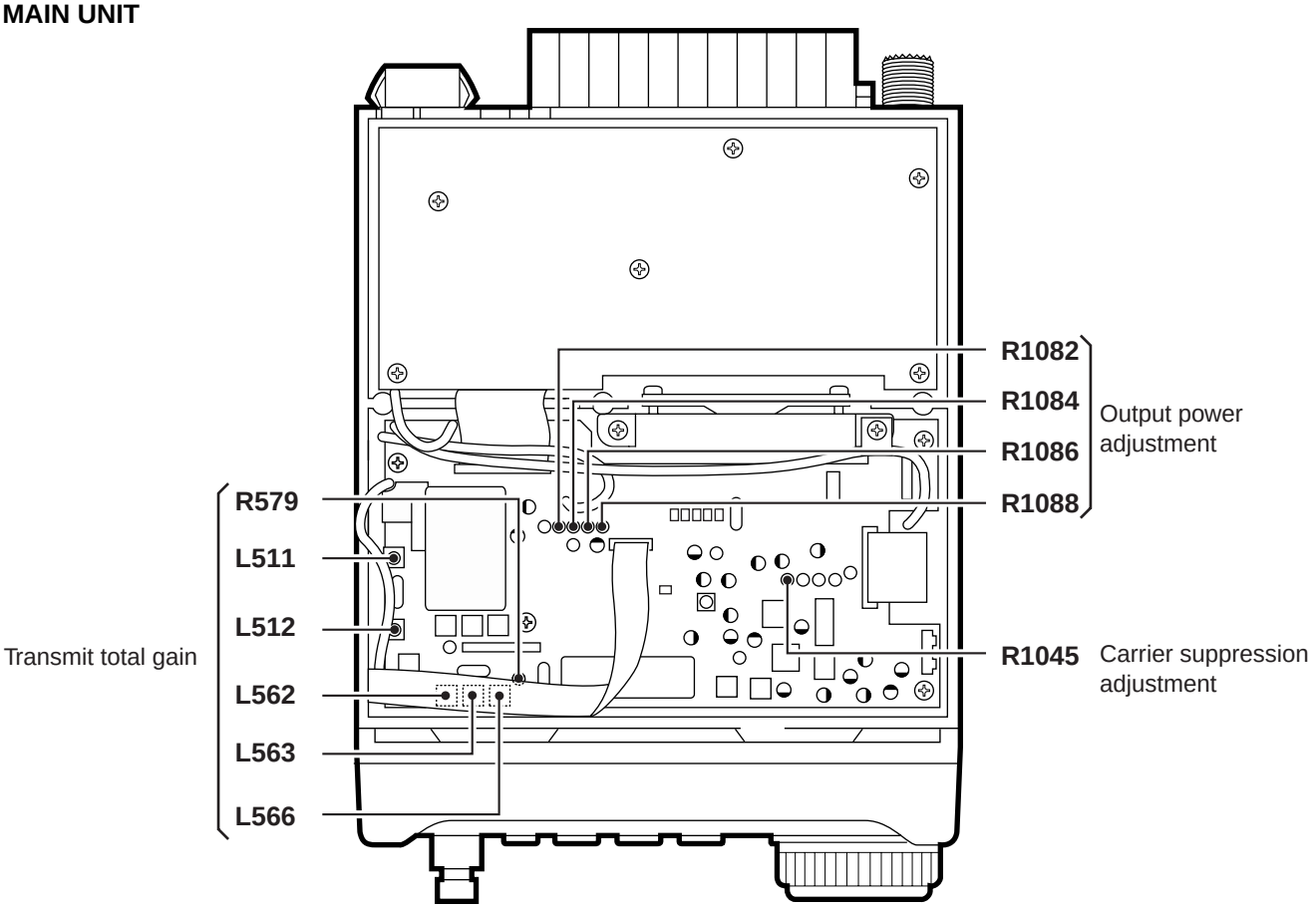

TRANSMITTER ADJUSTMENTS (continued)

ADJUSTMENT		ADJUSTMENT CONDITION	MEASUREMENT		VALUE	ADJUSTMENT POINT	
			UNIT	LOCATION		UNIT	ADJUST
FM VCO	1	• Display frequency: 29.10000 MHz • Mode : FM • [Q1 RF POWER] : H • [M4 TON] : OFF • Apply no signal to [MIC] connector. • Transmitting	MAIN	Connect a digital multimeter to check point CP1011.	1.8 V	MAIN	C1022
FM DEVIATION	1	• Display frequency: 29.10000 MHz • Mode : FM • [Q1 RF POWER] : H • [M4 TON] : OFF • [Q2 MIC GAIN] : 5 • Connect an audio generator to [MIC] connector and set as: 1 kHz/30 mV • Transmitting	Rear Panel	Connect an FM deviation meter to [ANT1] connector via an attenuator.	±4.5 kHz	MAIN	R1002
RESIDUAL AM	1	• Display frequency: 29.10000 MHz • Mode : FM • [Q1 RF POWER] : H • [M4 TON] : OFF • [Q2 MIC GAIN] : 5 • Connect an audio generator to [MIC] connector and set as: 1 kHz/30 mV and OFF • Transmitting		Connect an RF power meter to [ANT1] connector.	Minimum power difference with modulation and unmodulation.	MAIN	adjust in sequence L511, L512, then adjust L562, L563, L566.
	2	After adjustment, varify the TRANSMIT TOTAL GAIN and OUTPUT POWER adjustments.					
AM MODULATION	1	• Display frequency: 14.10000 MHz • Mode : AM • [Q1 RF POWER] : H • [Q2 MIC GAIN] : 5 • Disconnect the plug from J281 on the MAIN board. • Apply no signal to [MIC] connector. • Transmitting	MAIN	Connect an osilloscope to check point CP1041.	100 mVp-p	MAIN	R1042
	2	• Connect the plug to J281 on the MAIN board. • Apply no signal to [MIC] connector. • Transmitting	Rear Panel	Connect an RF power meter to [ANT1] connector.	35 W		R1080
	3	• Connect an audio generator to [MIC] connector and set as: 1 kHz/30 mV • Transmitting		Connect a modulation analyzer to [ANT1] connector via an attenuator.	90 % modulation		R999
CW CARRIER LEVEL	1	• Display frequency: 14.10000 MHz • Mode : CW • [Q1 RF POWER] : H • [Q5 KEY SPEED] : 60 • [M4 BRK] : BK (semi break-in) • CW paddle : n • Connect an RF power meter to [ANT1] connector. • Transmit dots for a while using a paddle.		Connect an osilloscope to check point CP921 and [ANT1] connector.	At the point where the CW carrier completely comes up in a 10 msec. delay after CP921 voltage comes up. 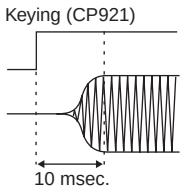	MAIN	R921

• **MAIN UNIT**

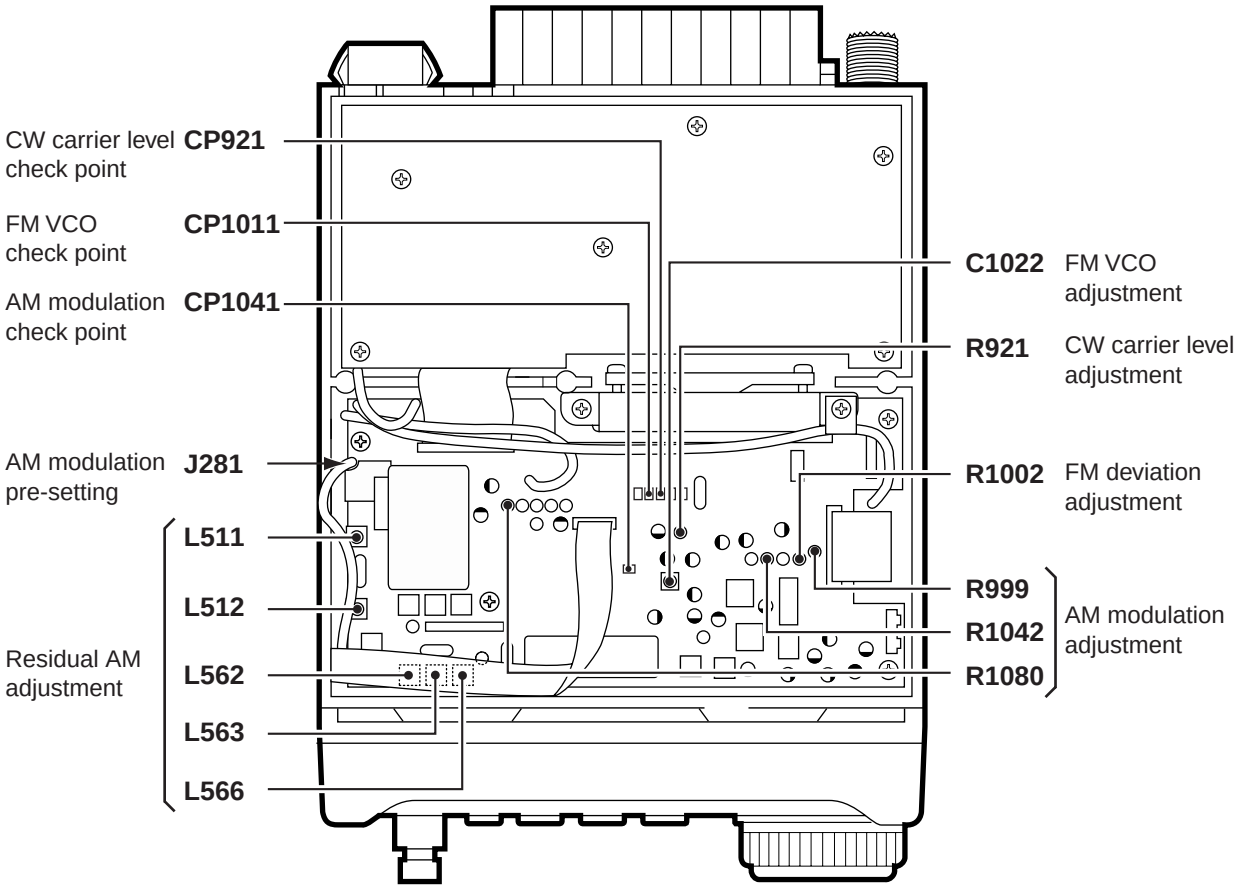
CW carrier level check point
CP921
FM VCO check point
CP1011
AM modulation check point
CP1041
AM modulation pre-setting
J281
Residual AM adjustment
L511
L512
L562
L563
L566
C1022
FM VCO adjustment
R921
CW carrier level adjustment
R1002
FM deviation adjustment
R999
R1042
R1080
AM modulation adjustment

TRANSMITTER ADJUSTMENTS (continued)

ADJUSTMENT		ADJUSTMENT CONDITION	MEASUREMENT		VALUE	ADJUSTMENT POINT	
			UNIT	LOCATION		UNIT	ADJUST
IDLING CURRENT (for drive amplifiers)	1	• Display frequency: 14.10000 MHz • Mode : USB • [Q2 MIC GAIN] : 1 (minimum) • turn R162, R174, R175, R214, R231 (on the PA unit) to maximum counterclockwise position. • Disconnect the plug from J571 on the PA unit. • Transmitting	PA	Connect a DC ammeter between the DC power supply and transceiver's DC power socket (P601 on the PA unit).	0.5 A increase from that R162 is in maximum counterclockwise position.	PA	R162
	2	• Display frequency: 145.10000 MHz • Mode : USB • [Q2 MIC GAIN] : 1 (minimum) • Transmitting			1.0 A increase from step 1.		R214
(for final amplifiers)	3	• Display frequency: 14.10000 MHz • Mode : USB • [Q2 MIC GAIN] : 1 (minimum) • Transmitting			1.0 A increase from that R174 is in maximum counterclockwise position.		R174
	4	• Transmitting			1.0 A increase from step 3.		R175
	5	• Display frequency: 145.10000 MHz • Mode : USB • [Q2 MIC GAIN] : 1 (minimum) • Transmitting			2.0 A increase from step 4.		R231
SWR DETECTION	1	• Display frequency: 14.10000 MHz • Mode : USB • Ground CP1071 on the MAIN board. • Connect an audio generator to [MIC] connector and set as: 1.5 kHz/30 mV • Transmitting	Rear Panel	Connect an RF power meter to [ANT1] connector.	100 W	Quick set mode	Q2 MIC GAIN
	2	• Transmitting	FILTER	Connect a digital multimeter to check point W16.	Minimum voltage	FILTER	C58
	3	After remove the jumper wire from CP1071 on the MAIN board.					

• **PA UNIT**

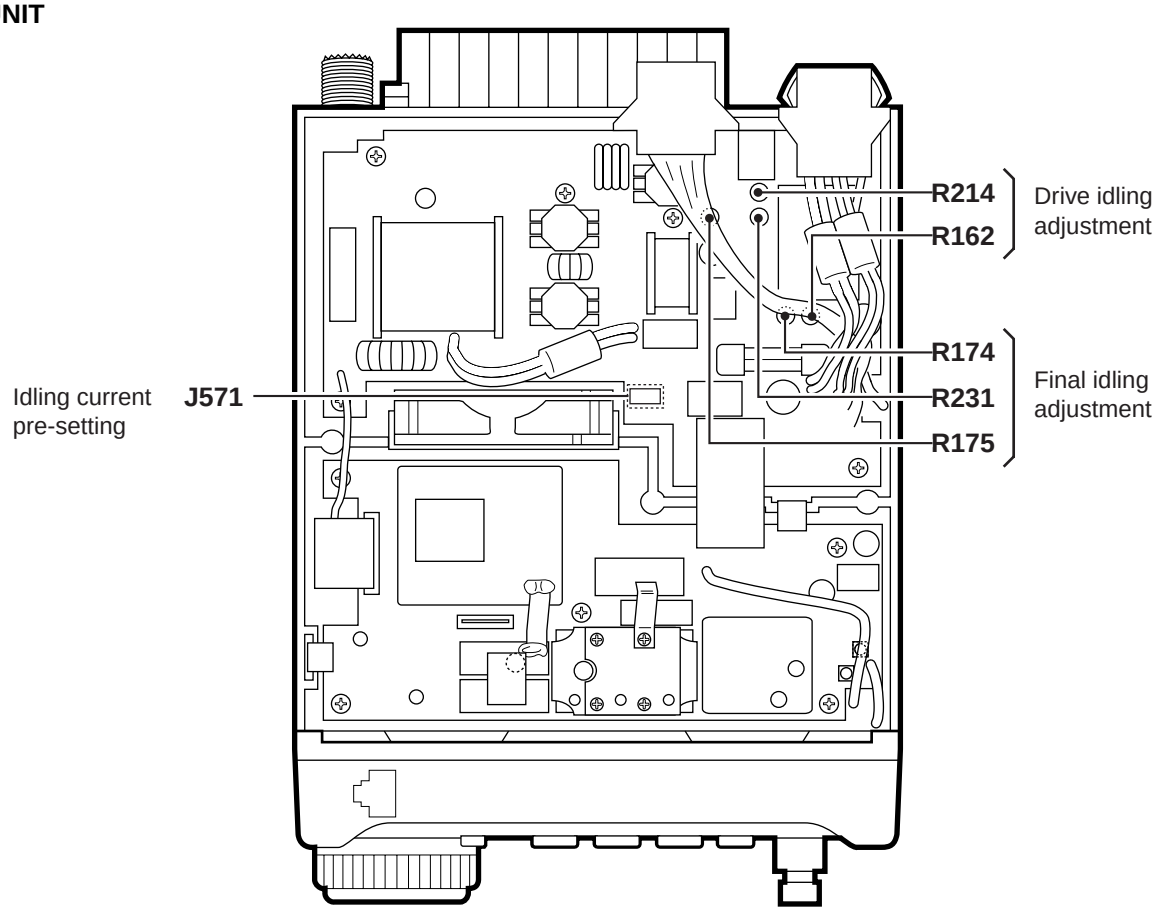

• **MAIN AND FILTER UNITS**

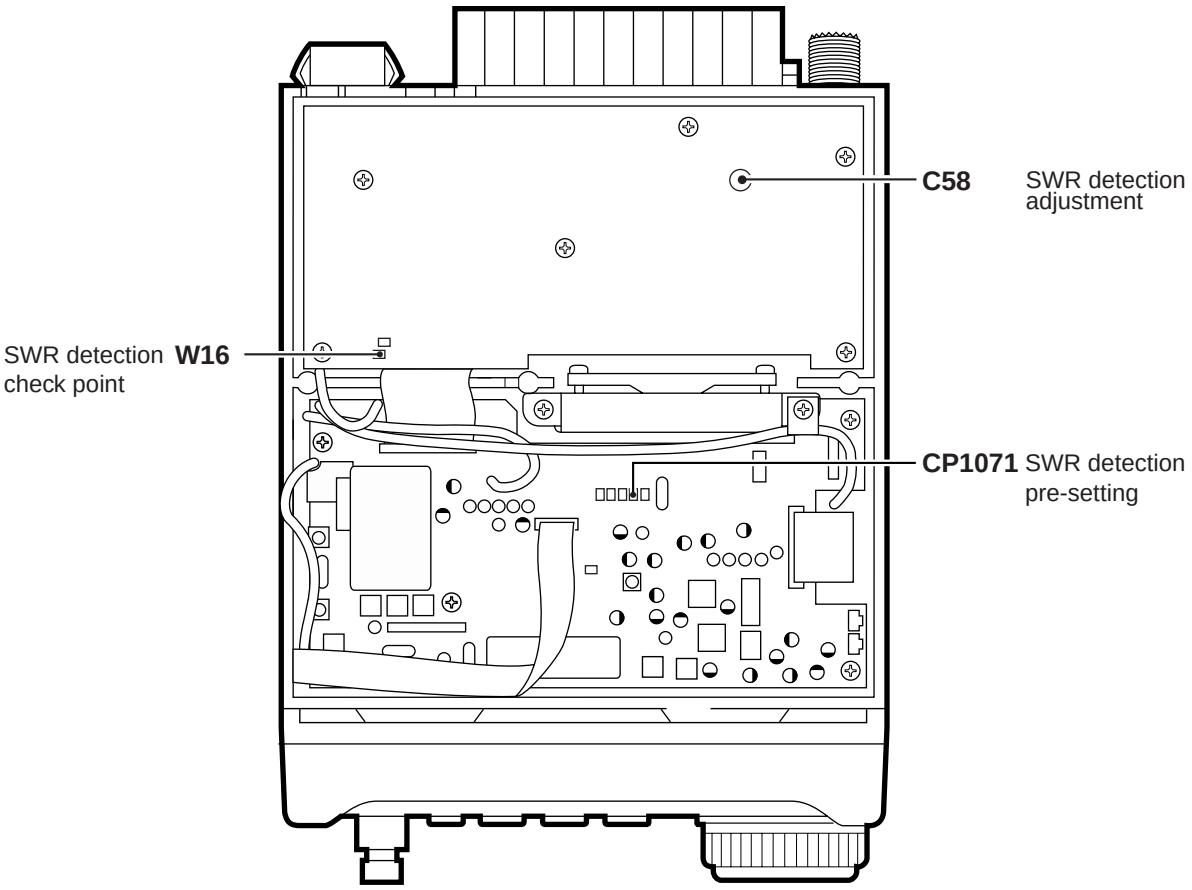

4-4 RECEIVER ADJUSTMENTS

ADJUSTMENT		ADJUSTMENT CONDITION	MEASUREMENT		VALUE	ADJUSTMENT POINT	
			UNIT	LOCATION		UNIT	ADJUST
RECEIVER TOTAL GAIN	1	• Display freq. : 14.10000 MHz • Mode : USB • [RIT] : OFF • [M4 AGC] : Fast (F AGC) • [M3 NB] : OFF • [P.AMP/ATT] : Preamp ON • Connect a standard signal generator to the [ANT1] connector and set as: Frequency : 14.10150 MHz Level : 0.5 µV* (–113 dBm) Modulation : OFF • Receiving	Rear Panel	Connect an AC millivoltmeter to the [EXT SP] jack with an 8 Ω dummy load.	Muximum AF output level	MAIN	L731, L741
	2	• [P.AMP/ATT] : Preamp OFF • Set an SSG as: Frequency : 14.10150 MHz Level : 500 µV* (–53 dBm) and OFF Modulation : OFF • Receiving	Rear Panel	Connect an AC millivoltmeter to the [EXT SP] jack with a 8 Ω dummy load.	30 dB of AF level difference	MAIN	R741
WFM RECEIVING	1	• Display freq. : 14.10000 MHz • Mode : WFM • Set an SSG as: Frequency : 14.10000 MHz Level : 500 µV* (–53 dBm) Modulation : OFF • Receiving	MAIN	Connect a digital multimeter or oscilloscope to check point CP631.	4.0 V	MAIN	L632
NOISE BLANKER	1	• Display freq. : 14.10000 MHz • Mode : USB • [P.AMP/ATT] : Preamp ON • [M3 NB] : OFF • R623 (MAIN) : Center • Connect an SSG to the [ANT1] connector and set as: Frequency : 14.1015 MHz Level : 18 µV* (–82 dBm) Modulation : OFF and apply the following signal to the [ANT1] connector. 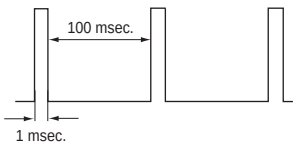 • Receiving	MAIN	Connect an oscilloscope to check point CP632.	Adjust the maximum noise wave displayed on the oscilloscope.	MAIN	L621, L633
	2	• [M3 NB] : ON • Set an SSG as: Level : 10 µV* (–87 dBm) Modulation : OFF • Receiving			At the point where the noise just reduces.	MAIN	R623

*This output level of the standard signal generator (SSG) is indicated as SSG's open circuit.

• **MAIN UNIT**

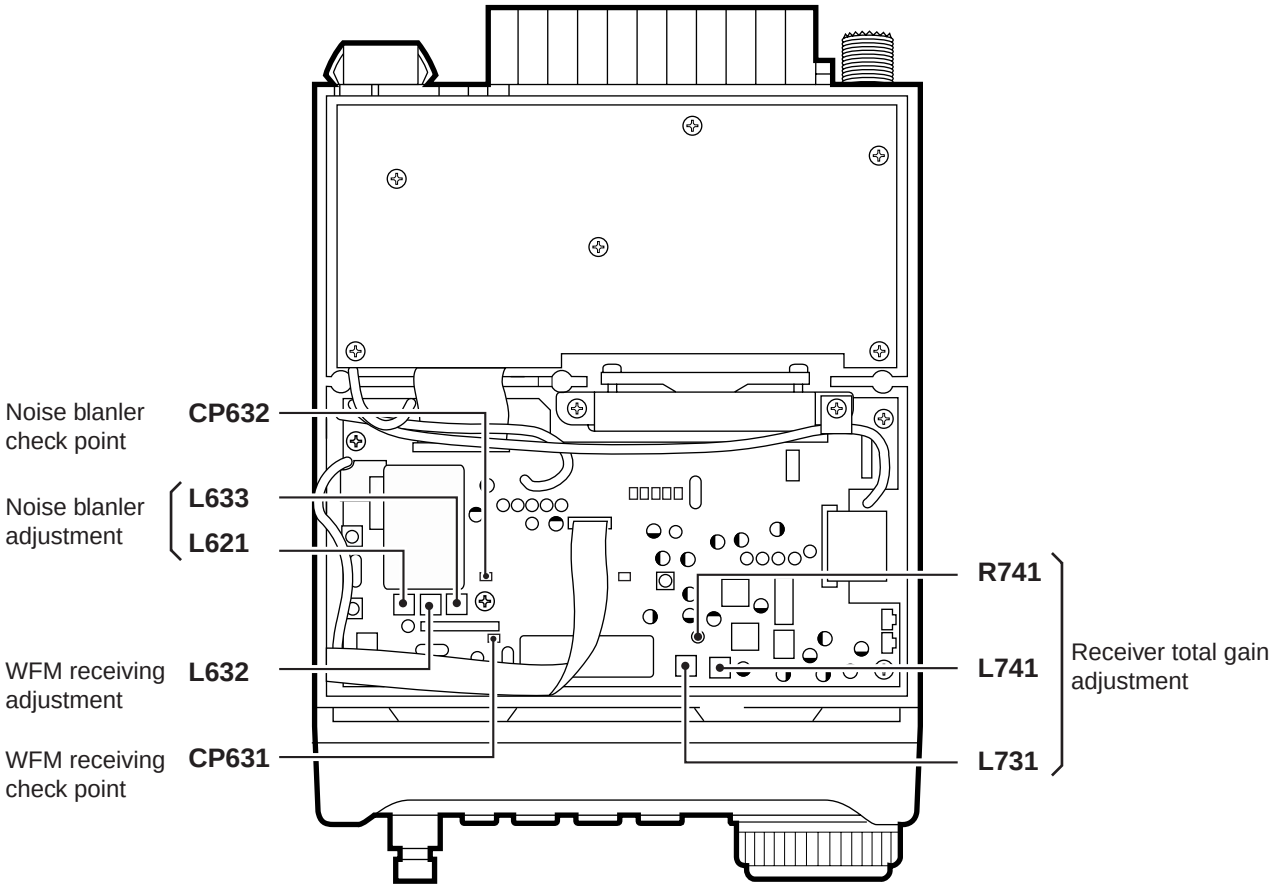
Noise blanler check point
CP632
Noise blanler adjustment
L633
L621
WFM receiving adjustment
L632
WFM receiving check point
CP631
R741
L741
L731
Receiver total gain adjustment

4-5 SET MODE ADJUSTMENT

ADJUSTMENT		ADJUSTMENT CONDITION	DISPLAY	OPERATION
ENTERING ADJUSTMENT SET MODE	1	• Enter adjustment set mode: ① Turn power OFF. ② Terminate the [REMOTE] jack with a 3.5(d) mm mini-plug. ③ While pushing [P.AMP/ATT] and [TUNE/CALL], turn power ON.	USB SEt uP EXIT RX TX	Push [F-3 (TX)] to enter the TX adjustment setting mode. Then advance to the following setting, or push [UP]/[DN] to scroll the display.
Id APC	1	• Connect an RF power meter to [ANT1] connector. • Connect a DC ammeter between the DC power supply and transceiver's DC power socket (P601 on the PA unit). • Transmit using an external PTT switch.	SET IdAPC	Set a total current at 15 A by adjusting R1125 on the MAIN board. Push [MENU] to set the "SET IdAPC" after returning receiving condition.
FILTER CALIBRATION	1	• Connect an RF power meter to [ANT1] connector.	GO FILTER CAL	Push and hold [MENU (GO)] to make the calibration. • Transceiver transmits for a while.
POWER METER (14 MHz)	1	• Connect an RF power meter to [ANT1] connector. • Transmit using an external PTT switch.	SET 90 %	Set to 90 W using [MAIN DIAL], then push [MENU] while transmitting.
	2	• Transmit using an external PTT switch.	SET 50 %	Set to 50 W using [MAIN DIAL], then push [MENU] while transmitting.
TUNING POWER (14 MHz)	1	• Connect an RF power meter to [ANT1] connector. • Transmit using an external PTT switch.	SET TUNE Po	Set to 10 W using [MAIN DIAL], then push [MENU] while transmitting.
(50 MHz)	2	• Transmit using an external PTT switch.	SET TUNE Po	Set to 10 W using [MAIN DIAL], then push [MENU] while transmitting.
POWER METER (145 MHz)	1	• Connect an RF power meter to [ANT2] connector. • Transmit using an external PTT switch.	SET 90 %	Set to 45 W using [MAIN DIAL], then push [MENU] while transmitting.
	2	• Transmit using an external PTT switch.	SET 50 %	Set to 25 W using [MAIN DIAL], then push [MENU] while transmitting.
POWER METER (430 MHz)	1	• Connect an RF power meter to [ANT2] connector. • Transmit using an external PTT switch.	SET 90 %	Set to 18 W using [MAIN DIAL], then push [MENU] while transmitting.
	2	• Transmit using an external PTT switch.	SET 50 %	Set to 10 W using [MAIN DIAL], then push [MENU] while transmitting.
ALC METER	1	• Connect an RF power meter to [ANT1] connector. • Connect an audio generator to [MIC] connector and set as : Level : 1.5 kHz/30mV • Transmit using an external PTT switch.	ALC START	Push and hold [MENU] to set ALC reference level while transmitting.
SWR METER	1	• Connect a 50 Ω dummy load or power meter to [ANT1] connector.	SWR 1 LOAD	Push [MENU] to set SWR reference level.
	2	• Connect a 50 Ω dummy load or power meter to [ANT1] connector.	SWR 2 LOAD	Push [MENU] to set SWR2 level. • The display returns to the same as the ADUSTMENT SET MODE above.
		Push [F-1 (EXIT)] to exit adjustment set mode.		

SET MODE ADJUSTMENT (continued)

ADJUSTMENT		ADJUSTMENT CONDITION	DISPLAY	OPERATION
ENTERING ADJUSTMENT SET MODE	1	• Enter adjustment set mode: ① Turn power OFF. ② Terminate the [REMOTE] jack with a 3.5(d) mm mini-plug. ③ While pushing [P.AMP/ATT] and [TUNE/CALL], turn power ON.	USB SEt uP EXIT RX TX	Push [F-2 (RX)] to enter the RX adjustment setting mode. Then advance to the following setting, or push [UP]/[DN] to scroll the display.
SENSITIVITY	1	• Connect a standard signal generator to [ANT2] and set as: Frequency : 60.05150 MHz Modulation : OFF • Receiving	VHF1 BPF1 L	Set a connected SSG's level at 10 dB of S/N ratio with AC millivoltmeter.
	2			Set maximum AF level using the [MAIN DIAL], then push [MENU] to set the "VHF1 BPF1 L".
	3	• Same operation as step 2 for the listed BPFs. • Set an SSG as: Modulation : OFF VHF1 BPF2 L : 60.05150 MHz VHF1 BPF1 M : 90.50150 MHz — VHF1 BPF2 M : Same as left VHF1 BPF1 H : 128.9515 MHz — VHF1 BPF2 H : Same as left VHF2 BPF1 L : 129.1015 MHz — VHF2 BPF2 L : Same as left VHF2 BPF1 M : 145.1515 MHz — VHF2 BPF2 M : Same as left VHF2 BPF1 H : 170.0015 MHz — VHF2 BPF2 H : Same as left UHF BPF1 L : 400.0015 MHz — UHF BPF2 L : Same as left UHF BPF1 M : 435.1515 MHz — UHF BPF2 M : Same as left UHF BPF1 H : 470.0015 MHz — UHF BPF2 H : Same as left • Receiving		
S-METER	1	• Connect an SSG to [ANT1] connector and set as: Frequency : 14.1515 MHz Level : OFF • Receiving	S0 LEVEL	Push [MENU] to set the "S0 level".
	2	• Set an SSG as : Level : 50 µV (–73 dBm) Modulation : OFF • Receiving	S9 LEVEL	Push [MENU] to set the "S9 level".
	3	• Set an SSG as : Level : 50 mV (–13 dBm) Modulation : OFF • Receiving	+60dB LEVEL	Push [MENU] to set the "+60 dB level". • The display returns to the same as the ADUSTMENT SET MODE above.
		Push [F-1 (EXIT)] to exit adjustment set mode.		

SECTION 5 PARTS LIST

[FRONT UNIT]

REF NO.	ORDER NO.	DESCRIPTION	
S1	2250000290	ENCODER	SW-159 (EC24B50B)
W1	8900006040	CABLE	OPC-593
W2	8900006250	CABLE	OPC-610

[DISPLAY BOARD]

REF NO.	ORDER NO.	DESCRIPTION	
IC1	1140008050	S.IC	HD6433832SD47H
IC2	1130007960	S.IC	SED1522F0C (QFP15-100PIN)
IC3	1130002660	S.IC	µPD4030BG-T1
IC4	1110004750	S.IC	S-80945ALMP-DA9-T2
IC5	1180001080	S.IC	S-81250PG-PD-T1
IC6	1140003630	S.IC	X24C01S-2.7T6
Q1	1590002310	S.TRANSISTOR	DTC114EE TL
Q2	1520000460	S.TRANSISTOR	2SB1132 T100 R
Q3	1530002060	S.TRANSISTOR	2SC4081 T107 R
Q4	1540000440	S.TRANSISTOR	2SD1619-T-TD
Q8	1590002370	S.TRANSISTOR	XP4111 (TX)
Q9	1590001870	S.TRANSISTOR	DTA114EE TL
Q10	1530002060	S.TRANSISTOR	2SC4081 T107 R
Q11	1520000380	TRANSISTOR	2SB1143 S
Q12	1590002370	S.TRANSISTOR	XP4111 (TX)
Q13	1520000460	S.TRANSISTOR	2SB1132 T100 R
Q14	1530002060	S.TRANSISTOR	2SC4081 T107 R
Q15	1590001870	S.TRANSISTOR	DTA114EE TL
Q16	1590002770	S.FET	CPH3404
D1	1750000370	S.DIODE	DA221 TL
D2	1750000370	S.DIODE	DA221 TL
D3	1750000370	S.DIODE	DA221 TL
D5	1790001250	S.DIODE	MA2S111-(TX)
D6	1790001250	S.DIODE	MA2S111-(TX)
D7	1160000140	S.DIODE	DAP222 TL
D9	1790001250	S.DIODE	MA2S111-(TX)
D10	1790001250	S.DIODE	MA2S111-(TX)
D11	1160000060	S.DIODE	DAN202U T107
D12	1790001250	S.DIODE	MA2S111-(TX)
D13	1160000060	S.DIODE	DAN202U T107
D14	1160000140	S.DIODE	DAP222 TL
D15	1160000140	S.DIODE	DAP222 TL
D16	1160000140	S.DIODE	DAP222 TL
X1	6050009660	S.XTAL	MA-406 (9.8304 MHz)
L1	6200003260	S.COIL	NL 322522T-101J
L2	6200003950	S.COIL	HF50ACC 322513-T
L3	6200003950	S.COIL	HF50ACC 322513-T
L4	6200003950	S.COIL	HF50ACC 322513-T
L5	6200003950	S.COIL	HF50ACC 322513-T
R1	7030003340	S.RESISTOR	ERJ3GEYJ 151 V (150 Ω)
R2	7030003400	S.RESISTOR	ERJ3GEYJ 471 V (470 Ω)
R3	7030003400	S.RESISTOR	ERJ3GEYJ 471 V (470 Ω)
R4	7030003440	S.RESISTOR	ERJ3GEYJ 102 V (1 kΩ)
R5	7030003340	S.RESISTOR	ERJ3GEYJ 151 V (150 Ω)
R6	7030003440	S.RESISTOR	ERJ3GEYJ 102 V (1 kΩ)
R7	7030003440	S.RESISTOR	ERJ3GEYJ 102 V (1 kΩ)
R8	7030003590	S.RESISTOR	ERJ3GEYJ 183 V (18 kΩ)
R9	7030003560	S.RESISTOR	ERJ3GEYJ 103 V (10 kΩ)
R10	7030003590	S.RESISTOR	ERJ3GEYJ 183 V (18 kΩ)
R11	7030003560	S.RESISTOR	ERJ3GEYJ 103 V (10 kΩ)
R12	7030003590	S.RESISTOR	ERJ3GEYJ 183 V (18 kΩ)
R13	7030003560	S.RESISTOR	ERJ3GEYJ 103 V (10 kΩ)

[DISPLAY BOARD]

REF NO.	ORDER NO.	DESCRIPTION	
R14	7030003590	S.RESISTOR	ERJ3GEYJ 183 V (18 kΩ)
R15	7030003560	S.RESISTOR	ERJ3GEYJ 103 V (10 kΩ)
R16	7030003590	S.RESISTOR	ERJ3GEYJ 183 V (18 kΩ)
R17	7030003560	S.RESISTOR	ERJ3GEYJ 103 V (10 kΩ)
R18	7030003590	S.RESISTOR	ERJ3GEYJ 183 V (18 kΩ)
R19	7030003560	S.RESISTOR	ERJ3GEYJ 103 V (10 kΩ)
R20	7030003560	S.RESISTOR	ERJ3GEYJ 103 V (10 kΩ)
R21	7030003560	S.RESISTOR	ERJ3GEYJ 103 V (10 kΩ)
R22	7030003560	S.RESISTOR	ERJ3GEYJ 103 V (10 kΩ)
R23	7030003560	S.RESISTOR	ERJ3GEYJ 103 V (10 kΩ)
R24	7030003560	S.RESISTOR	ERJ3GEYJ 103 V (10 kΩ)
R25	7030003560	S.RESISTOR	ERJ3GEYJ 103 V (10 kΩ)
R26	7030003520	S.RESISTOR	ERJ3GEYJ 472 V (4.7 kΩ)
R27	7030003520	S.RESISTOR	ERJ3GEYJ 472 V (4.7 kΩ)
R29	7030003520	S.RESISTOR	ERJ3GEYJ 472 V (4.7 kΩ)
R30	7030003440	S.RESISTOR	ERJ3GEYJ 102 V (1 kΩ)
R33	7010003871	RESISTOR	PSD1/4 2.2 Ω
R36	7030003440	S.RESISTOR	ERJ3GEYJ 102 V (1 kΩ)
R37	7030003600	S.RESISTOR	ERJ3GEYJ 223 V (22 kΩ)
R38	7030007110	S.RESISTOR	MCR18EZHJ 100 Ω (101)
R39	7030007110	S.RESISTOR	MCR18EZHJ 100 Ω (101)
R40	7030003640	S.RESISTOR	ERJ3GEYJ 473 V (47 kΩ)
R41	7030003640	S.RESISTOR	ERJ3GEYJ 473 V (47 kΩ)
R42	7030003440	S.RESISTOR	ERJ3GEYJ 102 V (1 kΩ)
R44	7030003500	S.RESISTOR	ERJ3GEYJ 332 V (3.3 kΩ)
R45	7030003500	S.RESISTOR	ERJ3GEYJ 332 V (3.3 kΩ)
R46	7030003480	S.RESISTOR	ERJ3GEYJ 222 V (2.2 kΩ)
R47	7030003640	S.RESISTOR	ERJ3GEYJ 473 V (47 kΩ)
R49	7030003360	S.RESISTOR	ERJ3GEYJ 221 V (220 Ω)
R50	7030003800	S.RESISTOR	ERJ3GEYJ 105 V (1 MΩ)
R51	7030003680	S.RESISTOR	ERJ3GEYJ 104 V (100 kΩ)
R52	7030003720	S.RESISTOR	ERJ3GEYJ 224 V (220 kΩ)
R53	7030003680	S.RESISTOR	ERJ3GEYJ 104 V (100 kΩ)
R54	7030003800	S.RESISTOR	ERJ3GEYJ 105 V (1 MΩ)
R55	7030003680	S.RESISTOR	ERJ3GEYJ 104 V (100 kΩ)
R56	7030003720	S.RESISTOR	ERJ3GEYJ 224 V (220 kΩ)
R57	7030003680	S.RESISTOR	ERJ3GEYJ 104 V (100 kΩ)
R58	7030003800	S.RESISTOR	ERJ3GEYJ 105 V (1 MΩ)
R65	7030003560	S.RESISTOR	ERJ3GEYJ 103 V (10 kΩ)
R66	7030003560	S.RESISTOR	ERJ3GEYJ 103 V (10 kΩ)
R67	7030003560	S.RESISTOR	ERJ3GEYJ 103 V (10 kΩ)
R68	7030003560	S.RESISTOR	ERJ3GEYJ 103 V (10 kΩ)
R69	7030003520	S.RESISTOR	ERJ3GEYJ 472 V (4.7 kΩ)
R70	7030003520	S.RESISTOR	ERJ3GEYJ 472 V (4.7 kΩ)
R71	7030003520	S.RESISTOR	ERJ3GEYJ 472 V (4.7 kΩ)
R72	7030003520	S.RESISTOR	ERJ3GEYJ 472 V (4.7 kΩ)
R73	7030003520	S.RESISTOR	ERJ3GEYJ 472 V (4.7 kΩ)
R74	7030003680	S.RESISTOR	ERJ3GEYJ 104 V (100 kΩ)
R75	7030003680	S.RESISTOR	ERJ3GEYJ 104 V (100 kΩ)
R76	7030003840	S.RESISTOR	ERJ3GEYJ 225 V (2.2 MΩ)
R83	7030003600	S.RESISTOR	ERJ3GEYJ 223 V (22 kΩ)
R84	7030003600	S.RESISTOR	ERJ3GEYJ 223 V (22 kΩ)
R85	7030003680	S.RESISTOR	ERJ3GEYJ 104 V (100 kΩ)
R92	7030003440	S.RESISTOR	ERJ3GEYJ 102 V (1 kΩ)
R93	7030003440	S.RESISTOR	ERJ3GEYJ 102 V (1 kΩ)
R95	7030003200	S.RESISTOR	ERJ3GEYJ 100 V (10 Ω)
R96	7030003200	S.RESISTOR	ERJ3GEYJ 100 V (10 Ω)
R97	7030003390	S.RESISTOR	ERJ3GEYJ 391 V (390 Ω)
R98	7030003480	S.RESISTOR	ERJ3GEYJ 222 V (2.2 kΩ)
R99	7030003340	S.RESISTOR	ERJ3GEYJ 151 V (150 Ω)
R100	7030003800	S.RESISTOR	ERJ3GEYJ 105 V (1 MΩ)
R101	7030003680	S.RESISTOR	ERJ3GEYJ 104 V (100 kΩ)
R102	7030003720	S.RESISTOR	ERJ3GEYJ 224 V (220 kΩ)
R103	7030003680	S.RESISTOR	ERJ3GEYJ 104 V (100 kΩ)
R104	7030003800	S.RESISTOR	ERJ3GEYJ 105 V (1 MΩ)
R105	7030003680	S.RESISTOR	ERJ3GEYJ 104 V (100 kΩ)
R106	7030003720	S.RESISTOR	ERJ3GEYJ 224 V (220 kΩ)
R107	7030003680	S.RESISTOR	ERJ3GEYJ 104 V (100 kΩ)
R108	7030003640	S.RESISTOR	ERJ3GEYJ 473 V (47 kΩ)
R109	7030003420	S.RESISTOR	ERJ3GEYJ 681 V (680 Ω)
R110	7030003560	S.RESISTOR	ERJ3GEYJ 103 V (10 kΩ)
R111	7030003450	S.RESISTOR	ERJ3GEYJ 122 V (1.2 kΩ)
R112	7030003480	S.RESISTOR	ERJ3GEYJ 222 V (2.2 kΩ)
R113	7030003420	S.RESISTOR	ERJ3GEYJ 681 V (680 Ω)
R114	7030003560	S.RESISTOR	ERJ3GEYJ 103 V (10 kΩ)
R115	7030003520	S.RESISTOR	ERJ3GEYJ 472 V (4.7 kΩ)

S.=Surface mount

[DISPLAY BOARD]

REF NO.	ORDER NO.	DESCRIPTION	
R116	7030003430	S.RESISTOR	ERJ3GEYJ 821 V (820 Ω)
R117	7030003420	S.RESISTOR	ERJ3GEYJ 681 V (680 Ω)
R118	7030003460	S.RESISTOR	ERJ3GEYJ 152 V (1.5 kΩ)
R119	7030003420	S.RESISTOR	ERJ3GEYJ 681 V (680 Ω)
R120	7030003460	S.RESISTOR	ERJ3GEYJ 152 V (1.5 kΩ)
R121	7030003470	S.RESISTOR	ERJ3GEYJ 182 V (1.8 kΩ)
R122	7030003420	S.RESISTOR	ERJ3GEYJ 681 V (680 Ω)
R123	7030003390	S.RESISTOR	ERJ3GEYJ 391 V (390 Ω)
R124	7030003390	S.RESISTOR	ERJ3GEYJ 391 V (390 Ω)
R125	7030003390	S.RESISTOR	ERJ3GEYJ 391 V (390 Ω)
R126	7030003390	S.RESISTOR	ERJ3GEYJ 391 V (390 Ω)
R127	7030003390	S.RESISTOR	ERJ3GEYJ 391 V (390 Ω)
R128	7030003390	S.RESISTOR	ERJ3GEYJ 391 V (390 Ω)
R129	7030003390	S.RESISTOR	ERJ3GEYJ 391 V (390 Ω)
R130	7030003390	S.RESISTOR	ERJ3GEYJ 391 V (390 Ω)
R131	7030003450	S.RESISTOR	ERJ3GEYJ 122 V (1.2 kΩ)
R132	7030003450	S.RESISTOR	ERJ3GEYJ 122 V (1.2 kΩ)
R133	7030003450	S.RESISTOR	ERJ3GEYJ 122 V (1.2 kΩ)
R134	7030003450	S.RESISTOR	ERJ3GEYJ 122 V (1.2 kΩ)
R135	7030003450	S.RESISTOR	ERJ3GEYJ 122 V (1.2 kΩ)
R136	7030003450	S.RESISTOR	ERJ3GEYJ 122 V (1.2 kΩ)
R137	7030003450	S.RESISTOR	ERJ3GEYJ 122 V (1.2 kΩ)
R138	7030003450	S.RESISTOR	ERJ3GEYJ 122 V (1.2 kΩ)
R140	7030003430	S.RESISTOR	ERJ3GEYJ 821 V (820 Ω)
R141	7030003430	S.RESISTOR	ERJ3GEYJ 821 V (820 Ω)
R142	7030003680	S.RESISTOR	ERJ3GEYJ 104 V (100 kΩ)
C1	4030006880	S.CERAMIC	C1608 JB 1H 472K-T-A
C2	4030006880	S.CERAMIC	C1608 JB 1H 472K-T-A
C4	4030006880	S.CERAMIC	C1608 JB 1H 472K-T-A
C5	4030012610	S.CERAMIC	C2012 JB 1C 474K-T-A
C7	4030006880	S.CERAMIC	C1608 JB 1H 472K-T-A
C8	4030006880	S.CERAMIC	C1608 JB 1H 472K-T-A
C9	4030006880	S.CERAMIC	C1608 JB 1H 472K-T-A
C10	4030007020	S.CERAMIC	C1608 CH 1H 120J-T-A
C11	4030007020	S.CERAMIC	C1608 CH 1H 120J-T-A
C12	4030011600	S.CERAMIC	C1608 JB 1C 104KT-N
C13	4030011600	S.CERAMIC	C1608 JB 1C 104KT-N
C14	4030011600	S.CERAMIC	C1608 JB 1C 104KT-N
C15	4030006860	S.CERAMIC	C1608 JB 1H 102K-T-A
C16	4030006860	S.CERAMIC	C1608 JB 1H 102K-T-A
C18	4030015170	S.CERAMIC	C3216 JB 0J 475M-T-N
C19	4030011600	S.CERAMIC	C1608 JB 1C 104KT-N
C20	4030015170	S.CERAMIC	C3216 JB 0J 475M-T-N
C21	4550002980	S.TANTALUM	TEMSVA 1C 225M-8L
C22	4030011600	S.CERAMIC	C1608 JB 1C 104KT-N
C23	4030011600	S.CERAMIC	C1608 JB 1C 104KT-N
C24	4550002980	S.TANTALUM	TEMSVA 1C 225M-8L
C25	4030011600	S.CERAMIC	C1608 JB 1C 104KT-N
C26	4030011600	S.CERAMIC	C1608 JB 1C 104KT-N
C27	4550002980	S.TANTALUM	TEMSVA 1C 225M-8L
C28	4550002980	S.TANTALUM	TEMSVA 1C 225M-8L
C29	4030011600	S.CERAMIC	C1608 JB 1C 104KT-N
C30	4030006880	S.CERAMIC	C1608 JB 1H 472K-T-A
C31	4030006880	S.CERAMIC	C1608 JB 1H 472K-T-A
C32	4030006880	S.CERAMIC	C1608 JB 1H 472K-T-A
C33	4030006880	S.CERAMIC	C1608 JB 1H 472K-T-A
C34	4030006850	S.CERAMIC	C1608 JB 1H 471K-T-A
C35	4030006860	S.CERAMIC	C1608 JB 1H 102K-T-A
C36	4030006860	S.CERAMIC	C1608 JB 1H 102K-T-A
C37	4030011600	S.CERAMIC	C1608 JB 1C 104KT-N
C38	4030008890	S.CERAMIC	C1608 JB 1C 273K-T-A
C39	4030011600	S.CERAMIC	C1608 JB 1C 104KT-N
C40	4030011600	S.CERAMIC	C1608 JB 1C 104KT-N
C41	4030011600	S.CERAMIC	C1608 JB 1C 104KT-N
C42	4030006880	S.CERAMIC	C1608 JB 1H 472K-T-A
J1	6510019120	S.CONNECTOR	S8B-PH-SM3-TB
J2	6450001630	CONNECTOR	HSJ1406-01-050
J3	6510018890	S.CONNECTOR	52559-1390
DS1	5040002020	S.LED	CL-170UR-CD-T
DS2	5040002010	S.LED	CL-170PG-CD-T
DS3	5040002020	S.LED	CL-170UR-CD-T
DS4	5030001670	LCD	DLC-8309YBGF
DS5	5030001290	LED	D2264
S1	2260002250	S.SWITCH	LS22BB-2SD-PG-T

[DISPLAY BOARD]

REF NO.	ORDER NO.	DESCRIPTION	
S2	2260002250	S.SWITCH	LS22BB-2SD-PG-T
S3	2260002540	S.SWITCH	SKQHFC
S4	2260002540	S.SWITCH	SKQHFC
S5	2260002540	S.SWITCH	SKQHFC
S6	2260002540	S.SWITCH	SKQHFC
S7	2260002540	S.SWITCH	SKQHFC
S8	2260002540	S.SWITCH	SKQHFC
S9	2260002540	S.SWITCH	SKQHFC
S10	2260002540	S.SWITCH	SKQHFC
S11	2260002550	S.SWITCH	SKQHFH
S12	2260002550	S.SWITCH	SKQHFH
S13	2260002250	S.SWITCH	LS22BB-2SD-PG-T
S14	2260001680	S.SWITCH	SKQDPB
W1	7030003860	S.JUMPER	ERJ3GE JPW V
W2	7120000470	JUMPER	ERDS2T0
WS1	8970023320	M.OTHER	SX2177 J LEAD SET (1)/DI
EP1	0910050925	PCB	B 5207E
EP2	8930039790	LCD CONTACT	SRCN-1691-ZSS-505

[VR BOARD]

REF NO.	ORDER NO.	DESCRIPTION	
R1	7210002780	VARIABLE	RV-300 (RK0972210) 10KB/10KB
R2	7210002940	VARIABLE	TP96D231E20-20F-10KB-1897
J1	6510018890	S.CONNECTOR	52559-1390
S1	2220000540	SWITCH	SW-162 (SSSS22-2-11)
EP1	0910050931	PCB	B 5208A

[MIAN BOARD]

REF NO.	ORDER NO.	DESCRIPTION	
IC151	1110003970	S.IC	µPC1658G-E1
IC221	1110004100	S.IC	TA4001F (TE85L)
IC222	1110004090	S.IC	TA4002F (TE85R)
IC231	1110004080	S.IC	µPC2709T-E3
IC281	1110004080	S.IC	µPC2709T-E3
IC351	1160000160	S.IC	TD62783AFN (S,EL)
IC521	1110003310	S.IC	µPC1688G-T1
IC571	1110003960	S.IC	µPC2713T-E3
IC631	1110003140	IC	LA1150N
IC791	1110003490	S.IC	TA31136FN (D,EL)
IC811	1110003780	S.IC	NJM2902V-TE1
IC841	1110004870	S.IC	TA4101F (TE12L)
IC861	1130009100	S.IC	BU4052BCFV-E2
IC891	1110003780	S.IC	NJM2902V-TE1
IC931	1140005280	S.IC	µPC5023GS-077-E1
IC971	1130006220	S.IC	TC4W53FU (TE12L)
IC981	1110003870	S.IC	NJM2058M-T1
IC1011	1130007660	S.IC	LC7153M-TLM
IC1041	1110004840	S.IC	NJM1496V-TE1
IC1091	1110003780	S.IC	NJM2902V-TE1
IC1141	1130009100	S.IC	BU4052BCFV-E2
IC2001	1140008070	S.IC	HD6433337YA56F
IC2101	1130009100	S.IC	BU4052BCFV-E2
IC2121	1130009020	S.IC	X25650S8I-2.5T6
IC2122	1130007110	S.IC	TC7W04FU (TE12L)
IC2131	1130003760	S.IC	TC4S81F (TE85R)
IC2161	1130009110	S.IC	S-80942ANMP-DD6-T2
IC2201	1110004310	S.IC	M62352GP 75EC
IC2202	1110003780	S.IC	NJM2902V-TE1

S.=Surface mount

[MAIN BOARD]

REF NO.	ORDER NO.	DESCRIPTION	
IC2221	1130007570	S.IC	BU4094BCFV-E2
IC2222	1130007570	S.IC	BU4094BCFV-E2
IC2231	1130005490	S.IC	TC74HC4094AF
IC2232	1130007570	S.IC	BU4094BCFV-E2
IC2241	1160000130	S.IC	TD62783AF (TP1)
Q111	1590002310	S.TRANSISTOR	DTC114EE TL
Q112	1590002310	S.TRANSISTOR	DTC114EE TL
Q121	1590002310	S.TRANSISTOR	DTC114EE TL
Q122	1590001870	S.TRANSISTOR	DTA114EE TL
Q131	1590002310	S.TRANSISTOR	DTC114EE TL
Q132	1590002310	S.TRANSISTOR	DTC114EE TL
Q133	1590001870	S.TRANSISTOR	DTA114EE TL
Q151	1590002310	S.TRANSISTOR	DTC114EE TL
Q271	1590000720	S.TRANSISTOR	DTA144EUA T106
Q351	1590002480	S.TRANSISTOR	UMC3N TR
Q352	1590002480	S.TRANSISTOR	UMC3N TR
Q353	1590002480	S.TRANSISTOR	UMC3N TR
Q354	1590002480	S.TRANSISTOR	UMC3N TR
Q521	1590002310	S.TRANSISTOR	DTC114EE TL
Q522	1590002310	S.TRANSISTOR	DTC114EE TL
Q571	1590002310	S.TRANSISTOR	DTC114EE TL
Q572	1530002060	S.TRANSISTOR	2SC4081 T107 R
Q573	1530002060	S.TRANSISTOR	2SC4081 T107 R
Q601	1530002060	S.TRANSISTOR	2SC4081 T107 R
Q611	1530002060	S.TRANSISTOR	2SC4081 T107 R
Q621	1560000560	S.FET	2SK882-GR (TE85L)
Q631	1510000510	S.TRANSISTOR	2SA1576A T106R
Q632	1560000560	S.FET	2SK882-GR (TE85L)
Q633	1530002060	S.TRANSISTOR	2SC4081 T107 R
Q634	1530002060	S.TRANSISTOR	2SC4081 T107 R
Q635	1590002310	S.TRANSISTOR	DTC114EE TL
Q636	1590001330	S.TRANSISTOR	DTA114EUA T106
Q721	1530002060	S.TRANSISTOR	2SC4081 T107 R
Q731	1580000600	S.FET	3SK126-O (TE85R)
Q732	1590002480	S.TRANSISTOR	UMC3N TR
Q741	1560000560	S.FET	2SK882-GR (TE85L)
Q751	1530002060	S.TRANSISTOR	2SC4081 T107 R
Q771	1530002060	S.TRANSISTOR	2SC4081 T107 R
Q772	1590002760	S.TRANSISTOR	UMC1NTR
Q773	1590002760	S.TRANSISTOR	UMC1NTR
Q774	1530002060	S.TRANSISTOR	2SC4081 T107 R
Q776	1530002060	S.TRANSISTOR	2SC4081 T107 R
Q777	1510000510	S.TRANSISTOR	2SA1576A T106R
Q961	1530002060	S.TRANSISTOR	2SC4081 T107 R
Q981	1590002310	S.TRANSISTOR	DTC114EE TL
Q982	1590002310	S.TRANSISTOR	DTC114EE TL
Q1011	1560000330	S.FET	2SK210-GR (TE85R)
Q1012	1590002310	S.TRANSISTOR	DTC114EE TL
Q1013	1530002060	S.TRANSISTOR	2SC4081 T107 R
Q1014	1590002760	S.TRANSISTOR	UMC1NTR
Q1041	1590002310	S.TRANSISTOR	DTC114EE TL
Q1061	1510000510	S.TRANSISTOR	2SA1576A T106R
Q1062	1530002060	S.TRANSISTOR	2SC4081 T107 R
Q1071	1590002310	S.TRANSISTOR	DTC114EE TL
Q1072	1590002310	S.TRANSISTOR	DTC114EE TL
Q1073	1590002310	S.TRANSISTOR	DTC114EE TL
Q1074	1590002310	S.TRANSISTOR	DTC114EE TL
Q1075	1590002310	S.TRANSISTOR	DTC114EE TL
Q1091	1590002310	S.TRANSISTOR	DTC114EE TL
Q1092	1530002060	S.TRANSISTOR	2SC4081 T107 R
Q1101	1590002310	S.TRANSISTOR	DTC114EE TL
Q1131	1510000510	S.TRANSISTOR	2SA1576A T106R
Q2001	1590001870	S.TRANSISTOR	DTA114EE TL
Q2131	1590002310	S.TRANSISTOR	DTC114EE TL
Q2141	1590002310	S.TRANSISTOR	DTC114EE TL
Q2171	1510000510	S.TRANSISTOR	2SA1576A T106R
Q2172	1530002060	S.TRANSISTOR	2SC4081 T107 R
Q2221	1590002480	S.TRANSISTOR	UMC3N TR
Q2222	1590002480	S.TRANSISTOR	UMC3N TR
Q2223	1590002480	S.TRANSISTOR	UMC3N TR
Q2224	1590002480	S.TRANSISTOR	UMC3N TR
Q2225	1590002480	S.TRANSISTOR	UMC3N TR
Q2226	1590002310	S.TRANSISTOR	DTC114EE TL
Q2227	1590002310	S.TRANSISTOR	DTC114EE TL
D111	1750000640	S.DIODE	1SV312 (TE85L)
D112	1750000640	S.DIODE	1SV312 (TE85L)
D123	1790001250	S.DIODE	MA2S111-(TX)
D131	1790001620	S.DIODE	1SV308 (TPL3)

[MAIN BOARD]

REF NO.	ORDER NO.	DESCRIPTION	
D132	1790001610	S.DIODE	1SS385 (TE85L)
D133	1790001250	S.DIODE	MA2S111-(TX)
D141	1790001620	S.DIODE	1SV308 (TPL3)
D142	1750000640	S.DIODE	1SV312 (TE85L)
D143	1790001620	S.DIODE	1SV308 (TPL3)
D151	1790001620	S.DIODE	1SV308 (TPL3)
D152	1790001620	S.DIODE	1SV308 (TPL3)
D153	1790001620	S.DIODE	1SV308 (TPL3)
D222	1750000640	S.DIODE	1SV312 (TE85L)
D224	1790001620	S.DIODE	1SV308 (TPL3)
D251	1790001620	S.DIODE	1SV308 (TPL3)
D252	1790001620	S.DIODE	1SV308 (TPL3)
D261	1790001620	S.DIODE	1SV308 (TPL3)
D262	1790001620	S.DIODE	1SV308 (TPL3)
D271	1750000430	S.DIODE	HSB88WSTR
D272	1790001620	S.DIODE	1SV308 (TPL3)
D273	1790001620	S.DIODE	1SV308 (TPL3)
D274	1790001620	S.DIODE	1SV308 (TPL3)
D275	1790001620	S.DIODE	1SV308 (TPL3)
D276	1790001620	S.DIODE	1SV308 (TPL3)
D351	1750000520	S.DIODE	DAN222TL
D352	1750000520	S.DIODE	DAN222TL
D500	1790001620	S.DIODE	1SV308 (TPL3)
D501	1790001620	S.DIODE	1SV308 (TPL3)
D502	1790000450	S.DIODE	MA862 (TX)
D521	1750000450	S.DIODE	1SV265-TL
D522	1750000450	S.DIODE	1SV265-TL
D551	1750000430	S.DIODE	HSB88WSTR
D552	1790000450	S.DIODE	MA862 (TX)
D561	1790000450	S.DIODE	MA862 (TX)
D562	1790000450	S.DIODE	MA862 (TX)
D571	1790001260	S.DIODE	MA2S077-(TX)
D572	1750000450	S.DIODE	1SV265-TL
D573	1750000450	S.DIODE	1SV265-TL
D574	1790001250	S.DIODE	MA2S111-(TX)
D621	1790000450	S.DIODE	MA862 (TX)
D622	1790001250	S.DIODE	MA2S111-(TX)
D623	1790001250	S.DIODE	MA2S111-(TX)
D631	1750000520	S.DIODE	DAN222TL
D632	1790001210	S.DIODE	1SS375-TL
D633	1790001250	S.DIODE	MA2S111-(TX)
D634	1790001250	S.DIODE	MA2S111-(TX)
D671	1790000450	S.DIODE	MA862 (TX)
D672	1790000450	S.DIODE	MA862 (TX)
D681	1790000450	S.DIODE	MA862 (TX)
D682	1790000450	S.DIODE	MA862 (TX)
D683	1790001250	S.DIODE	MA2S111-(TX)
D691	1790000450	S.DIODE	MA862 (TX)
D692	1790000450	S.DIODE	MA862 (TX)
D701	1790000450	S.DIODE	MA862 (TX)
D702	1790000450	S.DIODE	MA862 (TX)
D711	1790000450	S.DIODE	MA862 (TX)
D712	1790000450	S.DIODE	MA862 (TX)
D721	1790000450	S.DIODE	MA862 (TX)
D761	1790001210	S.DIODE	1SS375-TL
D771	1790001210	S.DIODE	1SS375-TL
D772	1790001250	S.DIODE	MA2S111-(TX)
D791	1790000450	S.DIODE	MA862 (TX)
D861	1790001240	S.DIODE	MA2S728-(TX)
D921	1750000520	S.DIODE	DAN222TL
D923	1710000160	S.DIODE	1SS133
D931	1750000370	S.DIODE	DA221 TL
D932	1750000370	S.DIODE	DA221 TL
D981	1790001610	S.DIODE	1SS385 (TE85L)
D1011	1790001250	S.DIODE	MA2S111-(TX)
D1012	1720000590	S.VARICAP	MA357 (TX)
D1013	1790001210	S.DIODE	1SS375-TL
D1014	1790001210	S.DIODE	1SS375-TL
D1041	1790001250	S.DIODE	MA2S111-(TX)
D1042	1790000450	S.DIODE	MA862 (TX)
D1061	1730002510	S.ZENER	MA8027-H (TX)
D1071	1790001250	S.DIODE	MA2S111-(TX)
D1072	1790001240	S.DIODE	MA2S728-(TX)
D1073	1790001240	S.DIODE	MA2S728-(TX)
D1074	1790001610	S.DIODE	1SS385 (TE85L)
D1075	1790001250	S.DIODE	MA2S111-(TX)
D1076	1790001040	S.ZENER	MA8033-L (TX)
D1077	1790001040	S.ZENER	MA8033-L (TX)
D1078	1790001240	S.DIODE	MA2S728-(TX)
D1091	1160000140	S.DIODE	DAP222 TL
D1111	1790001610	S.DIODE	1SS385 (TE85L)
D1112	1790001610	S.DIODE	1SS385 (TE85L)

S.=Surface mount

[MAIN BOARD]

REF NO.	ORDER NO.	DESCRIPTION	
D1113	1160000140	S.DIODE	DAP222 TL
D1114	1790001610	S.DIODE	1SS385 (TE85L)
D1131	1790001330	S.ZENER	MA8036-L (TX)
D1132	1160000140	S.DIODE	DAP222 TL
D1161	1790001610	S.DIODE	1SS385 (TE85L)
D2001	1750000370	S.DIODE	DA221 TL
D2002	1750000370	S.DIODE	DA221 TL
D2025	1790001250	S.DIODE	MA2S111-(TX) [ESP] only
D2026	1790001250	S.DIODE	MA2S111-(TX) [FRA] only
D2027	1790001250	S.DIODE	MA2S111-(TX) [EUR], [ESP] only
D2029	1790001250	S.DIODE	MA2S111-(TX) [ESP] only
D2030	1790001250	S.DIODE	MA2S111-(TX)
D2081	1790001250	S.DIODE	MA2S111-(TX)
D2082	1790001250	S.DIODE	MA2S111-(TX)
D2083	1790001250	S.DIODE	MA2S111-(TX)
D2101	1790001250	S.DIODE	MA2S111-(TX)
D2102	1790001250	S.DIODE	MA2S111-(TX)
D2103	1790001250	S.DIODE	MA2S111-(TX)
D2104	1790001250	S.DIODE	MA2S111-(TX)
D2105	1790001250	S.DIODE	MA2S111-(TX)
D2106	1790001250	S.DIODE	MA2S111-(TX)
D2107	1790001250	S.DIODE	MA2S111-(TX)
D2108	1790001610	S.DIODE	1SS385 (TE85L)
D2131	1750000370	S.DIODE	DA221 TL
D2132	1750000370	S.DIODE	DA221 TL
D2133	1750000520	S.DIODE	DAN222TL
D2141	1750000370	S.DIODE	DA221 TL
D2142	1750000370	S.DIODE	DA221 TL
D2143	1750000370	S.DIODE	DA221 TL
D2144	1790001250	S.DIODE	MA2S111-(TX)
D2145	1790001250	S.DIODE	MA2S111-(TX)
D2161	1790001250	S.DIODE	MA2S111-(TX)
D2171	1790001250	S.DIODE	MA2S111-(TX)
D2181	1730000910	S.ZENER	RD12M-T2B2
D2182	1790001620	S.DIODE	1SV308 (TPL3)
D2183	1790001620	S.DIODE	1SV308 (TPL3)
FI371	2040001420	S.LC	LFSC25N 12B 0440B
FI372	2040001420	S.LC	LFSC25N 12B 0440B
FI373	2040001420	S.LC	LFSC25N 12B 0440B
FI511	2010002090	FILTER	FL-261 (69.0115 MHz)
FI561	2010000270	FILTER	FL-23
FI601	2020001610	S.CERAMIC	SFECV10.7MA-5
FI611	2020001610	S.CERAMIC	SFECV10.7MA-5
FI671	2010002130	D.FILTER	FL-272 (9.0115 MHz)
FI681	2010000730	FILTER	FL-94
FI791	2020001050	S.CERAMIC	SFPC455E-TC01
X791	6070000150	S.DISCRIMINATOR	CDBC455CX24-TC
X2161	6050010500	S.XTAL	CR-636 (14.7456 MHz)
L111	6200003550	S.COIL	MLF1608A 4R7K-T
L112	6200008070	S.COIL	MLF1608E 6R8K 6.8U
L121	6200008860	S.COIL	ACL2520L-101K-T
L122	6200003550	S.COIL	MLF1608A 4R7K-T
L123	6200003940	S.COIL	NL 252018T-5R6J
L132	6200002630	S.COIL	NL 252018T-R10J
L133	6200002640	S.COIL	NL 252018T-R15J
L141	6200008860	S.COIL	ACL2520L-101K-T
L151	6200008860	S.COIL	ACL2520L-101K-T
L153	6200008860	S.COIL	ACL2520L-101K-T
L154	6200008860	S.COIL	ACL2520L-101K-T
L155	6200008860	S.COIL	ACL2520L-101K-T
L156	6200008860	S.COIL	ACL2520L-101K-T
L158	6200003640	S.COIL	MLF1608K 100K-T
L159	6200003640	S.COIL	MLF1608K 100K-T
L182	6200002520	S.COIL	ELJNC R18K-F
L183	6200002520	S.COIL	ELJNC R18K-F
L184	6200002520	S.COIL	ELJNC R18K-F
L195	6200006670	S.COIL	ELJRE 68NG-F
L196	6200006990	S.COIL	ELJRE 56NG-F
L231	6200001710	S.COIL	NL 322522T-220J
L232	6200004480	S.COIL	MLF1608D R82K-T
L233	6200004960	S.COIL	NL 252018T-R33J
L251	6200008230	S.COIL	0.30-1.3-5TL 22N
L252	6200008230	S.COIL	0.30-1.3-5TL 22N
L253	6200008330	S.COIL	0.45-1.4-4TL 15N
L254	6200008860	S.COIL	ACL2520L-101K-T
L255	6200008860	S.COIL	ACL2520L-101K-T

[MAIN BOARD]

REF NO.	ORDER NO.	DESCRIPTION	
L256	6200008860	S.COIL	ACL2520L-101K-T
L257	6200008860	S.COIL	ACL2520L-101K-T
L261	6200007720	S.COIL	LQN21A 33NJ04
L262	6200007740	S.COIL	LQN21A 47NJ04
L271	6130002960	S.COIL	617DB-1327=P3
L272	6130002960	S.COIL	617DB-1327=P3
L273	6200004920	S.COIL	MLF1608A 2R2K-T
L281	6200004590	S.COIL	MLF1608D R18K-T
L282	6200005600	S.COIL	ELJRE 3N3Z-F
L344	6200002970	S.COIL	NL 322522T-121J
L371	6200005690	S.COIL	ELJRE 18NG-F
L372	6200005690	S.COIL	ELJRE 18NG-F
L417	6200003550	S.COIL	MLF1608A 4R7K-T
L435	6200003550	S.COIL	MLF1608A 4R7K-T
L464	6200003550	S.COIL	MLF1608A 4R7K-T
L477	6200003550	S.COIL	MLF1608A 4R7K-T
L501	6200005190	S.COIL	MLF1608D R56K-T
L502	6200004070	S.COIL	MLR1608M 22NJ-T
L503	6200005190	S.COIL	MLF1608D R56K-T
L504	6200004940	S.COIL	MLF1608D R27K-T
L505	6200004220	S.COIL	MLR1608M 27NJ-T
L511	6150004970	S.COIL	LS-522
L512	6150004970	S.COIL	LS-522
L513	6200002990	S.COIL	NL 322522T-2R2J-3
L521	6200002990	S.COIL	NL 322522T-2R2J-3
L522	6200002990	S.COIL	NL 322522T-2R2J-3
L523	6200002990	S.COIL	NL 322522T-2R2J-3
L524	6200002990	S.COIL	NL 322522T-2R2J-3
L525	6200002990	S.COIL	NL 322522T-2R2J-3
L526	6200002990	S.COIL	NL 322522T-2R2J-3
L527	6200001830	S.COIL	NL 322522T-100J
L528	6200001830	S.COIL	NL 322522T-100J
L529	6200002990	S.COIL	NL 322522T-2R2J-3
L541	6200003540	S.COIL	MLF1608D R22K-T
L542	6200007700	S.COIL	LQN21A 22NJ04
L543	6200005180	S.COIL	MLF1608D R39K-T
L544	6200004600	S.COIL	MLF1608D R15K-T
L545	6200007700	S.COIL	LQN21A 22NJ04
L546	6200004720	S.COIL	MLF1608D R10K-T
L551	6140002810	S.COIL	LR-317
L552	6140002810	S.COIL	LR-317
L561	6200004600	S.COIL	MLF1608D R15K-T
L562	6150004870	S.COIL	LS-512
L563	6150004870	S.COIL	LS-512
L564	6200004600	S.COIL	MLF1608D R15K-T
L565	6200004600	S.COIL	MLF1608D R15K-T
L566	6150004900	S.COIL	LS-515
L571	6200002900	S.COIL	ELJSC 680K-F
L572	6200002900	S.COIL	ELJSC 680K-F
L573	6200003260	S.COIL	NL 322522T-101J
L574	6200002040	S.COIL	NL 252018T-101J
L575	6200003260	S.COIL	NL 322522T-101J
L576	6200003260	S.COIL	NL 322522T-101J
L577	6200003260	S.COIL	NL 322522T-101J
L578	6200003260	S.COIL	NL 322522T-101J
L579	6200001850	S.COIL	NL 322522T-5R6J
L601	6200003030	S.COIL	NL 322522T-R47J-3
L602	6200003260	S.COIL	NL 322522T-101J
L603	6200003260	S.COIL	NL 322522T-101J
L621	6150004880	S.COIL	LS-513
L622	6200002040	S.COIL	NL 252018T-101J
L631	6200003190	S.COIL	NL 322522T-470J
L632	6150004890	S.COIL	LS-514
L633	6150004880	S.COIL	LS-513
L634	6200003260	S.COIL	NL 322522T-101J
L671	6200003120	S.COIL	NL 322522T-8R2J
L681	6200001710	S.COIL	NL 322522T-220J
L682	6200001830	S.COIL	NL 322522T-100J
L701	6200003120	S.COIL	NL 322522T-8R2J
L711	6200003120	S.COIL	NL 322522T-8R2J
L731	6150004910	S.COIL	LS-516
L741	6150004910	S.COIL	LS-516
L791	6200003260	S.COIL	NL 322522T-101J
L841	6200003260	S.COIL	NL 322522T-101J
L1011	6200003260	S.COIL	NL 322522T-101J
L1012	6200003260	S.COIL	NL 322522T-101J
L1013	6200002990	S.COIL	NL 322522T-2R2J-3
L1014	6200001830	S.COIL	NL 322522T-100J
L1015	6200008600	S.COIL	ELJFC 560K-F 56U
L1041	6200002040	S.COIL	NL 252018T-101J
L1042	6200002040	S.COIL	NL 252018T-101J
L1043	6200002040	S.COIL	NL 252018T-101J

S.=Surface mount

[MAIN BOARD]

REF NO.	ORDER NO.	DESCRIPTION	
L1044	6200003260	S.COIL	NL 322522T-101J
L2001	6200001830	S.COIL	NL 322522T-100J
L2251	6200003950	S.COIL	HF50ACC 322513-T
L2252	6200003950	S.COIL	HF50ACC 322513-T
L2253	6200003640	S.COIL	MLF1608K 100K-T
L2254	6200005190	S.COIL	MLF1608D R56K-T
R111	7030003310	S.RESISTOR	ERJ3GEYJ 820 V (82 Ω)
R112	7030003320	S.RESISTOR	ERJ3GEYJ 101 V (100 Ω)
R113	7030003360	S.RESISTOR	ERJ3GEYJ 221 V (220 Ω)
R114	7030003720	S.RESISTOR	ERJ3GEYJ 224 V (220 kΩ)
R115	7030000300	S.RESISTOR	MCR10EZHJ 220 Ω (221)
R116	7030000300	S.RESISTOR	MCR10EZHJ 220 Ω (221)
R117	7030003320	S.RESISTOR	ERJ3GEYJ 101 V (100 Ω)
R120	7030003340	S.RESISTOR	ERJ3GEYJ 151 V (150 Ω)
R121	7030003350	S.RESISTOR	ERJ3GEYJ 181 V (180 Ω)
R122	7030002180	S.RESISTOR	MCR03EZHJ 1.8 kΩ
R123	7030003720	S.RESISTOR	ERJ3GEYJ 224 V (220 kΩ)
R124	7030003560	S.RESISTOR	ERJ3GEYJ 103 V (10 kΩ)
R125	7030002180	S.RESISTOR	MCR03EZHJ 1.8 kΩ
R126	7030002180	S.RESISTOR	MCR03EZHJ 1.8 kΩ
R131	7030003720	S.RESISTOR	ERJ3GEYJ 224 V (220 kΩ)
R132	7030003720	S.RESISTOR	ERJ3GEYJ 224 V (220 kΩ)
R133	7030009220	S.RESISTOR	ERJ12YJ561H
R134	7030003370	S.RESISTOR	ERJ3GEYJ 271 V (270 Ω)
R135	7030003560	S.RESISTOR	ERJ3GEYJ 103 V (10 kΩ)
R141	7030003720	S.RESISTOR	ERJ3GEYJ 224 V (220 kΩ)
R142	7030003720	S.RESISTOR	ERJ3GEYJ 224 V (220 kΩ)
R143	7030002180	S.RESISTOR	MCR03EZHJ 1.8 kΩ
R144	7030002180	S.RESISTOR	MCR03EZHJ 1.8 kΩ
R145	7030002180	S.RESISTOR	MCR03EZHJ 1.8 kΩ
R151	7030003360	S.RESISTOR	ERJ3GEYJ 221 V (220 Ω)
R153	7030003340	S.RESISTOR	ERJ3GEYJ 151 V (150 Ω)
R154	7030003400	S.RESISTOR	ERJ3GEYJ 471 V (470 Ω)
R155	7030003430	S.RESISTOR	ERJ3GEYJ 821 V (820 Ω)
R156	7030003350	S.RESISTOR	ERJ3GEYJ 181 V (180 Ω)
R157	7030003400	S.RESISTOR	ERJ3GEYJ 471 V (470 Ω)
R158	7030003720	S.RESISTOR	ERJ3GEYJ 224 V (220 kΩ)
R159	7030003200	S.RESISTOR	ERJ3GEYJ 100 V (10 Ω)
R160	7030003370	S.RESISTOR	ERJ3GEYJ 271 V (270 Ω)
R161	7030003230	S.RESISTOR	ERJ3GEYJ 180 V (18 Ω)
R162	7030003370	S.RESISTOR	ERJ3GEYJ 271 V (270 Ω)
R163	7030003360	S.RESISTOR	ERJ3GEYJ 221 V (220 Ω)
R164	7030003280	S.RESISTOR	ERJ3GEYJ 470 V (47 Ω)
R165	7030003360	S.RESISTOR	ERJ3GEYJ 221 V (220 Ω)
R174	7030003360	S.RESISTOR	ERJ3GEYJ 221 V (220 Ω)
R181	7030000340	S.RESISTOR	MCR10EZHJ 470 Ω (471)
R200	7030003350	S.RESISTOR	ERJ3GEYJ 181 V (180 Ω)
R201	7030003370	S.RESISTOR	ERJ3GEYJ 271 V (270 Ω)
R202	7030003340	S.RESISTOR	ERJ3GEYJ 151 V (150 Ω)
R203	7030003200	S.RESISTOR	ERJ3GEYJ 100 V (10 Ω)
R204	7030003340	S.RESISTOR	ERJ3GEYJ 151 V (150 Ω)
R223	7030003220	S.RESISTOR	ERJ3GEYJ 150 V (15 Ω)
R224	7030003370	S.RESISTOR	ERJ3GEYJ 271 V (270 Ω)
R232	7030003400	S.RESISTOR	ERJ3GEYJ 471 V (470 Ω)
R234	7030003200	S.RESISTOR	ERJ3GEYJ 100 V (10 Ω)
R236	7030003370	S.RESISTOR	ERJ3GEYJ 271 V (270 Ω)
R237	7030003230	S.RESISTOR	ERJ3GEYJ 180 V (18 Ω)
R238	7030003370	S.RESISTOR	ERJ3GEYJ 271 V (270 Ω)
R251	7030000300	S.RESISTOR	MCR10EZHJ 220 Ω (221)
R252	7030003360	S.RESISTOR	ERJ3GEYJ 221 V (220 Ω)
R253	7030003360	S.RESISTOR	ERJ3GEYJ 221 V (220 Ω)
R271	7030000300	S.RESISTOR	MCR10EZHJ 220 Ω (221)
R274	7030003440	S.RESISTOR	ERJ3GEYJ 102 V (1 kΩ)
R275	7030003440	S.RESISTOR	ERJ3GEYJ 102 V (1 kΩ)
R276	7030003440	S.RESISTOR	ERJ3GEYJ 102 V (1 kΩ)
R277	7030003440	S.RESISTOR	ERJ3GEYJ 102 V (1 kΩ)
R278	7030003560	S.RESISTOR	ERJ3GEYJ 103 V (10 kΩ)
R279	7030003440	S.RESISTOR	ERJ3GEYJ 102 V (1 kΩ)
R280	7030003380	S.RESISTOR	ERJ3GEYJ 331 V (330 Ω)
R281	7030003370	S.RESISTOR	ERJ3GEYJ 271 V (270 Ω)
R282	7030003230	S.RESISTOR	ERJ3GEYJ 180 V (18 Ω)
R283	7030003370	S.RESISTOR	ERJ3GEYJ 271 V (270 Ω)
R284	7030003200	S.RESISTOR	ERJ3GEYJ 100 V (10 Ω)
R285	7030003400	S.RESISTOR	ERJ3GEYJ 471 V (470 Ω)
R286	7030003200	S.RESISTOR	ERJ3GEYJ 100 V (10 Ω)
R288	7030003500	S.RESISTOR	ERJ3GEYJ 332 V (3.3 kΩ)
R340	7030003560	S.RESISTOR	ERJ3GEYJ 103 V (10 kΩ)
R341	7030003560	S.RESISTOR	ERJ3GEYJ 103 V (10 kΩ)
R342	7030003560	S.RESISTOR	ERJ3GEYJ 103 V (10 kΩ)
R343	7030003560	S.RESISTOR	ERJ3GEYJ 103 V (10 kΩ)

[MAIN BOARD]

REF NO.	ORDER NO.	DESCRIPTION	
R351	7030003560	S.RESISTOR	ERJ3GEYJ 103 V (10 kΩ)
R352	7030003560	S.RESISTOR	ERJ3GEYJ 103 V (10 kΩ)
R353	7030003560	S.RESISTOR	ERJ3GEYJ 103 V (10 kΩ)
R354	7030003560	S.RESISTOR	ERJ3GEYJ 103 V (10 kΩ)
R355	7030003560	S.RESISTOR	ERJ3GEYJ 103 V (10 kΩ)
R356	7030003560	S.RESISTOR	ERJ3GEYJ 103 V (10 kΩ)
R357	7030003560	S.RESISTOR	ERJ3GEYJ 103 V (10 kΩ)
R358	7030003560	S.RESISTOR	ERJ3GEYJ 103 V (10 kΩ)
R359	7030003560	S.RESISTOR	ERJ3GEYJ 103 V (10 kΩ)
R501	7030003440	S.RESISTOR	ERJ3GEYJ 102 V (1 kΩ)
R502	7030003440	S.RESISTOR	ERJ3GEYJ 102 V (1 kΩ)
R503	7030003400	S.RESISTOR	ERJ3GEYJ 471 V (470 Ω)
R511	7030003440	S.RESISTOR	ERJ3GEYJ 102 V (1 kΩ)
R512	7030003440	S.RESISTOR	ERJ3GEYJ 102 V (1 kΩ)
R513	7030003380	S.RESISTOR	ERJ3GEYJ 331 V (330 Ω)
R514	7030003400	S.RESISTOR	ERJ3GEYJ 471 V (470 Ω)
R521	7030003280	S.RESISTOR	ERJ3GEYJ 470 V (47 Ω)
R522	7030003280	S.RESISTOR	ERJ3GEYJ 470 V (47 Ω)
R523	7030003320	S.RESISTOR	ERJ3GEYJ 101 V (100 Ω)
R524	7030003360	S.RESISTOR	ERJ3GEYJ 221 V (220 Ω)
R525	7030003360	S.RESISTOR	ERJ3GEYJ 221 V (220 Ω)
R526	7030003360	S.RESISTOR	ERJ3GEYJ 221 V (220 Ω)
R527	7030003360	S.RESISTOR	ERJ3GEYJ 221 V (220 Ω)
R528	7030003360	S.RESISTOR	ERJ3GEYJ 221 V (220 Ω)
R551	7030003370	S.RESISTOR	ERJ3GEYJ 271 V (270 Ω)
R552	7030003230	S.RESISTOR	ERJ3GEYJ 180 V (18 Ω)
R553	7030003370	S.RESISTOR	ERJ3GEYJ 271 V (270 Ω)
R554	7030003400	S.RESISTOR	ERJ3GEYJ 471 V (470 Ω)
R561	7030003280	S.RESISTOR	ERJ3GEYJ 470 V (47 Ω)
R562	7030003360	S.RESISTOR	ERJ3GEYJ 221 V (220 Ω)
R563	7030003360	S.RESISTOR	ERJ3GEYJ 221 V (220 Ω)
R564	7030003280	S.RESISTOR	ERJ3GEYJ 470 V (47 Ω)
R571	7030003520	S.RESISTOR	ERJ3GEYJ 472 V (4.7 kΩ)
R572	7030003480	S.RESISTOR	ERJ3GEYJ 222 V (2.2 kΩ)
R573	7030003360	S.RESISTOR	ERJ3GEYJ 221 V (220 Ω)
R574	7030003360	S.RESISTOR	ERJ3GEYJ 221 V (220 Ω)
R576	7030003360	S.RESISTOR	ERJ3GEYJ 221 V (220 Ω)
R577	7030003360	S.RESISTOR	ERJ3GEYJ 221 V (220 Ω)
R578	7030003320	S.RESISTOR	ERJ3GEYJ 101 V (100 Ω)
R579	7310002670	S.TRIMMER	RV-143 (RH03A3AS2) 471
R580	7030003320	S.RESISTOR	ERJ3GEYJ 101 V (100 Ω)
R581	7030003360	S.RESISTOR	ERJ3GEYJ 221 V (220 Ω)
R582	7030003400	S.RESISTOR	ERJ3GEYJ 471 V (470 Ω)
R583	7030003360	S.RESISTOR	ERJ3GEYJ 221 V (220 Ω)
R584	7030003400	S.RESISTOR	ERJ3GEYJ 471 V (470 Ω)
R585	7030003520	S.RESISTOR	ERJ3GEYJ 472 V (4.7 kΩ)
R586	7030003500	S.RESISTOR	ERJ3GEYJ 332 V (3.3 kΩ)
R587	7030003520	S.RESISTOR	ERJ3GEYJ 472 V (4.7 kΩ)
R588	7030003640	S.RESISTOR	ERJ3GEYJ 473 V (47 kΩ)
R601	7030003440	S.RESISTOR	ERJ3GEYJ 102 V (1 kΩ)
R602	7030003570	S.RESISTOR	ERJ3GEYJ 123 V (12 kΩ)
R603	7030003480	S.RESISTOR	ERJ3GEYJ 222 V (2.2 kΩ)
R604	7030003380	S.RESISTOR	ERJ3GEYJ 331 V (330 Ω)
R605	7030003280	S.RESISTOR	ERJ3GEYJ 470 V (47 Ω)
R612	7030003540	S.RESISTOR	ERJ3GEYJ 682 V (6.8 kΩ)
R613	7030003440	S.RESISTOR	ERJ3GEYJ 102 V (1 kΩ)
R614	7030003410	S.RESISTOR	ERJ3GEYJ 561 V (560 Ω)
R615	7030003280	S.RESISTOR	ERJ3GEYJ 470 V (47 Ω)
R616	7030003440	S.RESISTOR	ERJ3GEYJ 102 V (1 kΩ)
R617	7030003280	S.RESISTOR	ERJ3GEYJ 470 V (47 Ω)
R618	7030003430	S.RESISTOR	ERJ3GEYJ 821 V (820 Ω)
R619	7030003420	S.RESISTOR	ERJ3GEYJ 681 V (680 Ω)
R621	7030003680	S.RESISTOR	ERJ3GEYJ 104 V (100 kΩ)
R622	7030003320	S.RESISTOR	ERJ3GEYJ 101 V (100 Ω)
R623	7310002740	S.TRIMMER	RV-150 (RH03A3A14X0FC) 103
R624	7030003620	S.RESISTOR	ERJ3GEYJ 333 V (33 kΩ)
R625	7030003520	S.RESISTOR	ERJ3GEYJ 472 V (4.7 kΩ)
R626	7030003320	S.RESISTOR	ERJ3GEYJ 101 V (100 Ω)
R627	7030003400	S.RESISTOR	ERJ3GEYJ 471 V (470 Ω)
R628	7030003400	S.RESISTOR	ERJ3GEYJ 471 V (470 Ω)
R631	7030003640	S.RESISTOR	ERJ3GEYJ 473 V (47 kΩ)
R632	7030003480	S.RESISTOR	ERJ3GEYJ 222 V (2.2 kΩ)
R633	7030003720	S.RESISTOR	ERJ3GEYJ 224 V (220 kΩ)
R634	7030003360	S.RESISTOR	ERJ3GEYJ 221 V (220 Ω)
R635	7030003520	S.RESISTOR	ERJ3GEYJ 472 V (4.7 kΩ)
R636	7030003320	S.RESISTOR	ERJ3GEYJ 101 V (100 Ω)
R637	7030003640	S.RESISTOR	ERJ3GEYJ 473 V (47 kΩ)
R638	7030003520	S.RESISTOR	ERJ3GEYJ 472 V (4.7 kΩ)
R639	7030003680	S.RESISTOR	ERJ3GEYJ 104 V (100 kΩ)
R640	7030003540	S.RESISTOR	ERJ3GEYJ 682 V (6.8 kΩ)
R641	7030003500	S.RESISTOR	ERJ3GEYJ 332 V (3.3 kΩ)
R642	7030003380	S.RESISTOR	ERJ3GEYJ 331 V (330 Ω)

S.=Surface mount

[MAIN BOARD]

REF NO.	ORDER NO.	DESCRIPTION	
R643	7030003600	S.RESISTOR	ERJ3GEYJ 223 V (22 kΩ)
R644	7030003440	S.RESISTOR	ERJ3GEYJ 102 V (1 kΩ)
R661	7030003560	S.RESISTOR	ERJ3GEYJ 103 V (10 kΩ)
R662	7030003560	S.RESISTOR	ERJ3GEYJ 103 V (10 kΩ)
R663	7030003560	S.RESISTOR	ERJ3GEYJ 103 V (10 kΩ)
R664	7030003560	S.RESISTOR	ERJ3GEYJ 103 V (10 kΩ)
R665	7030003560	S.RESISTOR	ERJ3GEYJ 103 V (10 kΩ)
R671	7030003480	S.RESISTOR	ERJ3GEYJ 222 V (2.2 kΩ)
R672	7030003480	S.RESISTOR	ERJ3GEYJ 222 V (2.2 kΩ)
R673	7030003360	S.RESISTOR	ERJ3GEYJ 221 V (220 Ω)
R674	7030003560	S.RESISTOR	ERJ3GEYJ 103 V (10 kΩ)
R681	7030003480	S.RESISTOR	ERJ3GEYJ 222 V (2.2 kΩ)
R682	7030003480	S.RESISTOR	ERJ3GEYJ 222 V (2.2 kΩ)
R683	7030003360	S.RESISTOR	ERJ3GEYJ 221 V (220 Ω)
R684	7030003560	S.RESISTOR	ERJ3GEYJ 103 V (10 kΩ)
R691	7030003480	S.RESISTOR	ERJ3GEYJ 222 V (2.2 kΩ)
R692	7030003480	S.RESISTOR	ERJ3GEYJ 222 V (2.2 kΩ)
R693	7030003560	S.RESISTOR	ERJ3GEYJ 103 V (10 kΩ)
R701	7030003480	S.RESISTOR	ERJ3GEYJ 222 V (2.2 kΩ)
R702	7030003480	S.RESISTOR	ERJ3GEYJ 222 V (2.2 kΩ)
R703	7030003360	S.RESISTOR	ERJ3GEYJ 221 V (220 Ω)
R704	7030003560	S.RESISTOR	ERJ3GEYJ 103 V (10 kΩ)
R711	7030003480	S.RESISTOR	ERJ3GEYJ 222 V (2.2 kΩ)
R712	7030003480	S.RESISTOR	ERJ3GEYJ 222 V (2.2 kΩ)
R713	7030003360	S.RESISTOR	ERJ3GEYJ 221 V (220 Ω)
R714	7030003560	S.RESISTOR	ERJ3GEYJ 103 V (10 kΩ)
R721	7030003320	S.RESISTOR	ERJ3GEYJ 101 V (100 Ω)
R722	7030003530	S.RESISTOR	ERJ3GEYJ 562 V (5.6 kΩ)
R723	7030003420	S.RESISTOR	ERJ3GEYJ 681 V (680 Ω)
R730	7030003570	S.RESISTOR	ERJ3GEYJ 123 V (12 kΩ)
R731	7030003580	S.RESISTOR	ERJ3GEYJ 153 V (15 kΩ)
R732	7030003590	S.RESISTOR	ERJ3GEYJ 183 V (18 kΩ)
R733	7030003400	S.RESISTOR	ERJ3GEYJ 471 V (470 Ω)
R734	7030003280	S.RESISTOR	ERJ3GEYJ 470 V (47 Ω)
R735	7030003400	S.RESISTOR	ERJ3GEYJ 471 V (470 Ω)
R736	7030003280	S.RESISTOR	ERJ3GEYJ 470 V (47 Ω)
R741	7310002720	S.TRIMMER	RV-148 (RH03A3AS3X0DA) 472
R742	7030003280	S.RESISTOR	ERJ3GEYJ 470 V (47 Ω)
R751	7030003400	S.RESISTOR	ERJ3GEYJ 471 V (470 Ω)
R752	7030003640	S.RESISTOR	ERJ3GEYJ 473 V (47 kΩ)
R753	7030003360	S.RESISTOR	ERJ3GEYJ 221 V (220 Ω)
R761	7030003440	S.RESISTOR	ERJ3GEYJ 102 V (1 kΩ)
R762	7030003660	S.RESISTOR	ERJ3GEYJ 683 V (68 kΩ)
R763	7030003680	S.RESISTOR	ERJ3GEYJ 104 V (100 kΩ)
R764	7030003580	S.RESISTOR	ERJ3GEYJ 153 V (15 kΩ)
R771	7030003520	S.RESISTOR	ERJ3GEYJ 472 V (4.7 kΩ)
R772	7030003440	S.RESISTOR	ERJ3GEYJ 102 V (1 kΩ)
R773	7030003540	S.RESISTOR	ERJ3GEYJ 682 V (6.8 kΩ)
R774	7030003440	S.RESISTOR	ERJ3GEYJ 102 V (1 kΩ)
R775	7030003800	S.RESISTOR	ERJ3GEYJ 105 V (1 MΩ)
R776	7030003320	S.RESISTOR	ERJ3GEYJ 101 V (100 Ω)
R777	7030003320	S.RESISTOR	ERJ3GEYJ 101 V (100 Ω)
R778	7030003560	S.RESISTOR	ERJ3GEYJ 103 V (10 kΩ)
R779	7030003520	S.RESISTOR	ERJ3GEYJ 472 V (4.7 kΩ)
R780	7030003640	S.RESISTOR	ERJ3GEYJ 473 V (47 kΩ)
R781	7030003680	S.RESISTOR	ERJ3GEYJ 104 V (100 kΩ)
R782	7030003420	S.RESISTOR	ERJ3GEYJ 681 V (680 Ω)
R783	7030003640	S.RESISTOR	ERJ3GEYJ 473 V (47 kΩ)
R785	7030003640	S.RESISTOR	ERJ3GEYJ 473 V (47 kΩ)
R786	7030003200	S.RESISTOR	ERJ3GEYJ 100 V (10 Ω)
R791	7030003480	S.RESISTOR	ERJ3GEYJ 222 V (2.2 kΩ)
R792	7030003560	S.RESISTOR	ERJ3GEYJ 103 V (10 kΩ)
R793	7030003460	S.RESISTOR	ERJ3GEYJ 152 V (1.5 kΩ)
R794	7030003740	S.RESISTOR	ERJ3GEYJ 334 V (330 kΩ)
R795	7030003700	S.RESISTOR	ERJ3GEYJ 154 V (150 kΩ)
R796	7030003500	S.RESISTOR	ERJ3GEYJ 332 V (3.3 kΩ)
R797	7030003440	S.RESISTOR	ERJ3GEYJ 102 V (1 kΩ)
R803	7030003520	S.RESISTOR	ERJ3GEYJ 472 V (4.7 kΩ)
R811	7030003560	S.RESISTOR	ERJ3GEYJ 103 V (10 kΩ)
R812	7030003630	S.RESISTOR	ERJ3GEYJ 393 V (39 kΩ)
R813	7030003560	S.RESISTOR	ERJ3GEYJ 103 V (10 kΩ)
R814	7030003700	S.RESISTOR	ERJ3GEYJ 154 V (150 kΩ)
R815	7030003700	S.RESISTOR	ERJ3GEYJ 154 V (150 kΩ)
R816	7030003320	S.RESISTOR	ERJ3GEYJ 101 V (100 Ω)
R821	7030003840	S.RESISTOR	ERJ3GEYJ 225 V (2.2 MΩ)
R822	7030003800	S.RESISTOR	ERJ3GEYJ 105 V (1 MΩ)
R823	7030003670	S.RESISTOR	ERJ3GEYJ 823 V (82 kΩ)
R824	7030003670	S.RESISTOR	ERJ3GEYJ 823 V (82 kΩ)
R825	7030003670	S.RESISTOR	ERJ3GEYJ 823 V (82 kΩ)
R826	7030003680	S.RESISTOR	ERJ3GEYJ 104 V (100 kΩ)
R827	7030003690	S.RESISTOR	ERJ3GEYJ 124 V (120 kΩ)
R828	7030003760	S.RESISTOR	ERJ3GEYJ 474 V (470 kΩ)

[MAIN BOARD]

REF NO.	ORDER NO.	DESCRIPTION	
R829	7030003680	S.RESISTOR	ERJ3GEYJ 104 V (100 kΩ)
R830	7030003840	S.RESISTOR	ERJ3GEYJ 225 V (2.2 MΩ)
R831	7030003800	S.RESISTOR	ERJ3GEYJ 105 V (1 MΩ)
R832	7030003560	S.RESISTOR	ERJ3GEYJ 103 V (10 kΩ)
R841	7030003400	S.RESISTOR	ERJ3GEYJ 471 V (470 Ω)
R842	7030003320	S.RESISTOR	ERJ3GEYJ 101 V (100 Ω)
R843	7030003440	S.RESISTOR	ERJ3GEYJ 102 V (1 kΩ)
R845	7030003650	S.RESISTOR	ERJ3GEYJ 563 V (56 kΩ)
R846	7030003680	S.RESISTOR	ERJ3GEYJ 104 V (100 kΩ)
R861	7030003600	S.RESISTOR	ERJ3GEYJ 223 V (22 kΩ)
R862	7030003660	S.RESISTOR	ERJ3GEYJ 683 V (68 kΩ)
R864	7030003580	S.RESISTOR	ERJ3GEYJ 153 V (15 kΩ)
R866	7030003760	S.RESISTOR	ERJ3GEYJ 474 V (470 kΩ)
R868	7030003580	S.RESISTOR	ERJ3GEYJ 153 V (15 kΩ)
R869	7030003570	S.RESISTOR	ERJ3GEYJ 123 V (12 kΩ)
R870	7030003640	S.RESISTOR	ERJ3GEYJ 473 V (47 kΩ)
R871	7030003560	S.RESISTOR	ERJ3GEYJ 103 V (10 kΩ)
R872	7030003560	S.RESISTOR	ERJ3GEYJ 103 V (10 kΩ)
R881	7030003560	S.RESISTOR	ERJ3GEYJ 103 V (10 kΩ)
R882	7030003560	S.RESISTOR	ERJ3GEYJ 103 V (10 kΩ)
R883	7030003640	S.RESISTOR	ERJ3GEYJ 473 V (47 kΩ)
R884	7030003560	S.RESISTOR	ERJ3GEYJ 103 V (10 kΩ)
R890	7030003700	S.RESISTOR	ERJ3GEYJ 154 V (150 kΩ)
R891	7030003690	S.RESISTOR	ERJ3GEYJ 124 V (120 kΩ)
R892	7030003650	S.RESISTOR	ERJ3GEYJ 563 V (56 kΩ)
R893	7030003640	S.RESISTOR	ERJ3GEYJ 473 V (47 kΩ)
R894	7030003680	S.RESISTOR	ERJ3GEYJ 104 V (100 kΩ)
R895	7030003520	S.RESISTOR	ERJ3GEYJ 472 V (4.7 kΩ)
R896	7310004250	TRIMMER	EVN-D2AA03 B25
R898	7030003680	S.RESISTOR	ERJ3GEYJ 104 V (100 kΩ)
R899	7030003680	S.RESISTOR	ERJ3GEYJ 104 V (100 kΩ)
R900	7310002740	S.TRIMMER	RV-150 (RH03A3A14X0FC) 103
R901	7030003640	S.RESISTOR	ERJ3GEYJ 473 V (47 kΩ)
R902	7030003520	S.RESISTOR	ERJ3GEYJ 472 V (4.7 kΩ)
R903	7030003520	S.RESISTOR	ERJ3GEYJ 472 V (4.7 kΩ)
R911	7030003680	S.RESISTOR	ERJ3GEYJ 104 V (100 kΩ)
R912	7030003680	S.RESISTOR	ERJ3GEYJ 104 V (100 kΩ)
R913	7030003400	S.RESISTOR	ERJ3GEYJ 471 V (470 Ω)
R921	7310002590	S.TRIMMER	RV-109 (RH03A3AJ3X0BA) 222
R922	7030003550	S.RESISTOR	ERJ3GEYJ 822 V (8.2 kΩ)
R923	7030003400	S.RESISTOR	ERJ3GEYJ 471 V (470 Ω)
R924	7030003520	S.RESISTOR	ERJ3GEYJ 472 V (4.7 kΩ)
R931	7030003520	S.RESISTOR	ERJ3GEYJ 472 V (4.7 kΩ)
R932	7030003670	S.RESISTOR	ERJ3GEYJ 823 V (82 kΩ)
R933	7030003680	S.RESISTOR	ERJ3GEYJ 104 V (100 kΩ)
R934	7030003560	S.RESISTOR	ERJ3GEYJ 103 V (10 kΩ)
R935	7030003540	S.RESISTOR	ERJ3GEYJ 682 V (6.8 kΩ)
R936	7030003600	S.RESISTOR	ERJ3GEYJ 223 V (22 kΩ)
R937	7030003560	S.RESISTOR	ERJ3GEYJ 103 V (10 kΩ)
R938	7030003680	S.RESISTOR	ERJ3GEYJ 104 V (100 kΩ)
R939	7030003720	S.RESISTOR	ERJ3GEYJ 224 V (220 kΩ)
R940	7030003540	S.RESISTOR	ERJ3GEYJ 682 V (6.8 kΩ)
R941	7030003360	S.RESISTOR	ERJ3GEYJ 221 V (220 Ω)
R942	7030003440	S.RESISTOR	ERJ3GEYJ 102 V (1 kΩ)
R943	7030003540	S.RESISTOR	ERJ3GEYJ 682 V (6.8 kΩ)
R944	7030003600	S.RESISTOR	ERJ3GEYJ 223 V (22 kΩ)
R945	7310004250	TRIMMER	EVN-D2AA03 B25
R946	7030003560	S.RESISTOR	ERJ3GEYJ 103 V (10 kΩ)
R947	7030003290	S.RESISTOR	ERJ3GEYJ 560 V (56 Ω)
R948	7030003640	S.RESISTOR	ERJ3GEYJ 473 V (47 kΩ)
R949	7030003640	S.RESISTOR	ERJ3GEYJ 473 V (47 kΩ)
R950	7030003720	S.RESISTOR	ERJ3GEYJ 224 V (220 kΩ)
R951	7030003720	S.RESISTOR	ERJ3GEYJ 224 V (220 kΩ)
R952	7030003520	S.RESISTOR	ERJ3GEYJ 472 V (4.7 kΩ)
R953	7030003560	S.RESISTOR	ERJ3GEYJ 103 V (10 kΩ)
R963	7030003320	S.RESISTOR	ERJ3GEYJ 101 V (100 Ω)
R964	7030003620	S.RESISTOR	ERJ3GEYJ 333 V (33 kΩ)
R965	7030003360	S.RESISTOR	ERJ3GEYJ 221 V (220 Ω)
R966	7030003510	S.RESISTOR	ERJ3GEYJ 392 V (3.9 kΩ)
R967	7030003440	S.RESISTOR	ERJ3GEYJ 102 V (1 kΩ)
R971	7030003560	S.RESISTOR	ERJ3GEYJ 103 V (10 kΩ)
R981	7030003200	S.RESISTOR	ERJ3GEYJ 100 V (10 Ω)
R982	7030003640	S.RESISTOR	ERJ3GEYJ 473 V (47 kΩ)
R983	7030003590	S.RESISTOR	ERJ3GEYJ 183 V (18 kΩ)
R984	7030003580	S.RESISTOR	ERJ3GEYJ 153 V (15 kΩ)
R985	7030003700	S.RESISTOR	ERJ3GEYJ 154 V (150 kΩ)
R986	7030003710	S.RESISTOR	ERJ3GEYJ 184 V (180 kΩ)
R987	7030003370	S.RESISTOR	ERJ3GEYJ 271 V (270 Ω)
R988	7030003700	S.RESISTOR	ERJ3GEYJ 154 V (150 kΩ)
R989	7030003700	S.RESISTOR	ERJ3GEYJ 154 V (150 kΩ)
R990	7030003730	S.RESISTOR	ERJ3GEYJ 274 V (270 kΩ)
R991	7030003780	S.RESISTOR	ERJ3GEYJ 684 V (680 kΩ)

S.=Surface mount

[MAIN BOARD]

REF NO.	ORDER NO.	DESCRIPTION	
R992	7030003750	S.RESISTOR	ERJ3GEYJ 394 V (390 kΩ)
R993	7030003670	S.RESISTOR	ERJ3GEYJ 823 V (82 kΩ)
R994	7030003670	S.RESISTOR	ERJ3GEYJ 823 V (82 kΩ)
R995	7030003450	S.RESISTOR	ERJ3GEYJ 122 V (1.2 kΩ)
R996	7030003440	S.RESISTOR	ERJ3GEYJ 102 V (1 kΩ)
R998	7030003600	S.RESISTOR	ERJ3GEYJ 223 V (22 kΩ)
R999	7310002740	S.TRIMMER	RV-150 (RH03A3A14X0FC) 103
R1000	7030003410	S.RESISTOR	ERJ3GEYJ 561 V (560 Ω)
R1001	7030003660	S.RESISTOR	ERJ3GEYJ 683 V (68 kΩ)
R1002	7310002720	S.TRIMMER	RV-148 (RH03A3AS3X0DA) 472
R1003	7030003660	S.RESISTOR	ERJ3GEYJ 683 V (68 kΩ)
R1004	7030003560	S.RESISTOR	ERJ3GEYJ 103 V (10 kΩ)
R1011	7030003320	S.RESISTOR	ERJ3GEYJ 101 V (100 Ω)
R1012	7030003620	S.RESISTOR	ERJ3GEYJ 333 V (33 kΩ)
R1013	7030003580	S.RESISTOR	ERJ3GEYJ 153 V (15 kΩ)
R1014	7030003830	S.RESISTOR	ERJ3GEYJ 185 V (1.8 MΩ)
R1015	7030003280	S.RESISTOR	ERJ3GEYJ 470 V (47 Ω)
R1016	7030003640	S.RESISTOR	ERJ3GEYJ 473 V (47 kΩ)
R1017	7030003560	S.RESISTOR	ERJ3GEYJ 103 V (10 kΩ)
R1018	7030003680	S.RESISTOR	ERJ3GEYJ 104 V (100 kΩ)
R1019	7030003480	S.RESISTOR	ERJ3GEYJ 222 V (2.2 kΩ)
R1020	7030003760	S.RESISTOR	ERJ3GEYJ 474 V (470 kΩ)
R1021	7030003320	S.RESISTOR	ERJ3GEYJ 101 V (100 Ω)
R1022	7030003680	S.RESISTOR	ERJ3GEYJ 104 V (100 kΩ)
R1023	7030003680	S.RESISTOR	ERJ3GEYJ 104 V (100 kΩ)
R1024	7030003340	S.RESISTOR	ERJ3GEYJ 151 V (150 Ω)
R1025	7030003320	S.RESISTOR	ERJ3GEYJ 101 V (100 Ω)
R1026	7030003680	S.RESISTOR	ERJ3GEYJ 104 V (100 kΩ)
R1027	7030003440	S.RESISTOR	ERJ3GEYJ 102 V (1 kΩ)
R1028	7030003440	S.RESISTOR	ERJ3GEYJ 102 V (1 kΩ)
R1029	7030003560	S.RESISTOR	ERJ3GEYJ 103 V (10 kΩ)
R1030	7030003560	S.RESISTOR	ERJ3GEYJ 103 V (10 kΩ)
R1031	7030003560	S.RESISTOR	ERJ3GEYJ 103 V (10 kΩ)
R1041	7030003320	S.RESISTOR	ERJ3GEYJ 101 V (100 Ω)
R1042	7310002790	S.TRIMMER	RV-155 (RH03A3AE5) 154
R1043	7030005680	S.RESISTOR	RR0816R-473-D (47 kΩ)
R1044	7030005680	S.RESISTOR	RR0816R-473-D (47 kΩ)
R1045	7310002720	S.TRIMMER	RV-148 (RH03A3AS3X0DA) 472
R1046	7030003440	S.RESISTOR	ERJ3GEYJ 102 V (1 kΩ)
R1047	7030003440	S.RESISTOR	ERJ3GEYJ 102 V (1 kΩ)
R1048	7030003430	S.RESISTOR	ERJ3GEYJ 821 V (820 Ω)
R1049	7030003450	S.RESISTOR	ERJ3GEYJ 122 V (1.2 kΩ)
R1050	7030003380	S.RESISTOR	ERJ3GEYJ 331 V (330 Ω)
R1051	7030003550	S.RESISTOR	ERJ3GEYJ 822 V (8.2 kΩ)
R1052	7030003380	S.RESISTOR	ERJ3GEYJ 331 V (330 Ω)
R1054	7030003420	S.RESISTOR	ERJ3GEYJ 681 V (680 Ω)
R1055	7030003560	S.RESISTOR	ERJ3GEYJ 103 V (10 kΩ)
R1057	7030003440	S.RESISTOR	ERJ3GEYJ 102 V (1 kΩ)
R1061	7030003400	S.RESISTOR	ERJ3GEYJ 471 V (470 Ω)
R1062	7030003440	S.RESISTOR	ERJ3GEYJ 102 V (1 kΩ)
R1070	7030003650	S.RESISTOR	ERJ3GEYJ 563 V (56 kΩ)
R1071	7030003640	S.RESISTOR	ERJ3GEYJ 473 V (47 kΩ)
R1072	7030003760	S.RESISTOR	ERJ3GEYJ 474 V (470 kΩ)
R1073	7030003800	S.RESISTOR	ERJ3GEYJ 105 V (1 MΩ)
R1074	7030003840	S.RESISTOR	ERJ3GEYJ 225 V (2.2 MΩ)
R1075	7030003560	S.RESISTOR	ERJ3GEYJ 103 V (10 kΩ)
R1076	7030003680	S.RESISTOR	ERJ3GEYJ 104 V (100 kΩ)
R1077	7030003720	S.RESISTOR	ERJ3GEYJ 224 V (220 kΩ)
R1079	7030003380	S.RESISTOR	ERJ3GEYJ 331 V (330 Ω)
R1080	7310002800	S.TRIMMER	RV-156 (RH03A3AJ5) 224
R1082	7310002800	S.TRIMMER	RV-156 (RH03A3AJ5) 224
R1084	7310002800	S.TRIMMER	RV-156 (RH03A3AJ5) 224
R1086	7310002800	S.TRIMMER	RV-156 (RH03A3AJ5) 224
R1088	7310002800	S.TRIMMER	RV-156 (RH03A3AJ5) 224
R1091	7030003380	S.RESISTOR	ERJ3GEYJ 331 V (330 Ω)
R1092	7030003400	S.RESISTOR	ERJ3GEYJ 471 V (470 Ω)
R1093	7030003560	S.RESISTOR	ERJ3GEYJ 103 V (10 kΩ)
R1094	7030003340	S.RESISTOR	ERJ3GEYJ 151 V (150 Ω)
R1095	7030004710	S.RESISTOR	ERJ3GEYJ 475 V (4.7 MΩ)
R1096	7030003600	S.RESISTOR	ERJ3GEYJ 223 V (22 kΩ)
R1097	7030003560	S.RESISTOR	ERJ3GEYJ 103 V (10 kΩ)
R1098	7030003560	S.RESISTOR	ERJ3GEYJ 103 V (10 kΩ)
R1099	7030003560	S.RESISTOR	ERJ3GEYJ 103 V (10 kΩ)
R1100	7030003360	S.RESISTOR	ERJ3GEYJ 221 V (220 Ω)
R1101	7030003360	S.RESISTOR	ERJ3GEYJ 221 V (220 Ω)
R1102	7030003440	S.RESISTOR	ERJ3GEYJ 102 V (1 kΩ)
R1103	7030003200	S.RESISTOR	ERJ3GEYJ 100 V (10 Ω)
R1104	7030003320	S.RESISTOR	ERJ3GEYJ 101 V (100 Ω)
R1111	7030003440	S.RESISTOR	ERJ3GEYJ 102 V (1 kΩ)
R1112	7030003800	S.RESISTOR	ERJ3GEYJ 105 V (1 MΩ)
R1113	7030003680	S.RESISTOR	ERJ3GEYJ 104 V (100 kΩ)
R1114	7030003560	S.RESISTOR	ERJ3GEYJ 103 V (10 kΩ)

[MAIN BOARD]

REF NO.	ORDER NO.	DESCRIPTION	
R1115	7030003470	S.RESISTOR	ERJ3GEYJ 182 V (1.8 kΩ)
R1116	7030003400	S.RESISTOR	ERJ3GEYJ 471 V (470 Ω)
R1121	7030003640	S.RESISTOR	ERJ3GEYJ 473 V (47 kΩ)
R1122	7030003640	S.RESISTOR	ERJ3GEYJ 473 V (47 kΩ)
R1123	7030003620	S.RESISTOR	ERJ3GEYJ 333 V (33 kΩ)
R1124	7030003620	S.RESISTOR	ERJ3GEYJ 333 V (33 kΩ)
R1125	7310002740	S.TRIMMER	RV-150 (RH03A3A14X0FC) 103
R1126	7030003800	S.RESISTOR	ERJ3GEYJ 105 V (1 MΩ)
R1127	7030003400	S.RESISTOR	ERJ3GEYJ 471 V (470 Ω)
R1128	7030003640	S.RESISTOR	ERJ3GEYJ 473 V (47 kΩ)
R1131	7030003560	S.RESISTOR	ERJ3GEYJ 103 V (10 kΩ)
R1132	7030003440	S.RESISTOR	ERJ3GEYJ 102 V (1 kΩ)
R1133	7030003680	S.RESISTOR	ERJ3GEYJ 104 V (100 kΩ)
R1141	7030003640	S.RESISTOR	ERJ3GEYJ 473 V (47 kΩ)
R1142	7030003640	S.RESISTOR	ERJ3GEYJ 473 V (47 kΩ)
R1143	7030003760	S.RESISTOR	ERJ3GEYJ 474 V (470 kΩ)
R1144	7030003760	S.RESISTOR	ERJ3GEYJ 474 V (470 kΩ)
R1145	7030003520	S.RESISTOR	ERJ3GEYJ 472 V (4.7 kΩ)
R1146	7030003760	S.RESISTOR	ERJ3GEYJ 474 V (470 kΩ)
R1147	7030003760	S.RESISTOR	ERJ3GEYJ 474 V (470 kΩ)
R1148	7030003760	S.RESISTOR	ERJ3GEYJ 474 V (470 kΩ)
R1149	7030003540	S.RESISTOR	ERJ3GEYJ 682 V (6.8 kΩ)
R1150	7030003520	S.RESISTOR	ERJ3GEYJ 472 V (4.7 kΩ)
R1161	7030003680	S.RESISTOR	ERJ3GEYJ 104 V (100 kΩ)
R1162	7030003680	S.RESISTOR	ERJ3GEYJ 104 V (100 kΩ)
R1163	7030003580	S.RESISTOR	ERJ3GEYJ 153 V (15 kΩ)
R1164	7030003590	S.RESISTOR	ERJ3GEYJ 183 V (18 kΩ)
R1165	7030003680	S.RESISTOR	ERJ3GEYJ 104 V (100 kΩ)
R1166	7030003740	S.RESISTOR	ERJ3GEYJ 334 V (330 kΩ)
R1167	7030003680	S.RESISTOR	ERJ3GEYJ 104 V (100 kΩ)
R1168	7030003680	S.RESISTOR	ERJ3GEYJ 104 V (100 kΩ)
R1169	7030003700	S.RESISTOR	ERJ3GEYJ 154 V (150 kΩ)
R1170	7030003680	S.RESISTOR	ERJ3GEYJ 104 V (100 kΩ)
R2001	7030003360	S.RESISTOR	ERJ3GEYJ 221 V (220 Ω)
R2002	7030003440	S.RESISTOR	ERJ3GEYJ 102 V (1 kΩ)
R2003	7030003440	S.RESISTOR	ERJ3GEYJ 102 V (1 kΩ)
R2004	7030003640	S.RESISTOR	ERJ3GEYJ 473 V (47 kΩ)
R2005	7030003640	S.RESISTOR	ERJ3GEYJ 473 V (47 kΩ)
R2011	7030003320	S.RESISTOR	ERJ3GEYJ 101 V (100 Ω)
R2012	7030003440	S.RESISTOR	ERJ3GEYJ 102 V (1 kΩ)
R2013	7030003440	S.RESISTOR	ERJ3GEYJ 102 V (1 kΩ)
R2014	7030003440	S.RESISTOR	ERJ3GEYJ 102 V (1 kΩ)
R2015	7030003440	S.RESISTOR	ERJ3GEYJ 102 V (1 kΩ)
R2016	7030003440	S.RESISTOR	ERJ3GEYJ 102 V (1 kΩ)
R2017	7030003440	S.RESISTOR	ERJ3GEYJ 102 V (1 kΩ)
R2018	7030003440	S.RESISTOR	ERJ3GEYJ 102 V (1 kΩ)
R2019	7030003440	S.RESISTOR	ERJ3GEYJ 102 V (1 kΩ)
R2021	7030003640	S.RESISTOR	ERJ3GEYJ 473 V (47 kΩ)
R2041	7030003440	S.RESISTOR	ERJ3GEYJ 102 V (1 kΩ)
R2042	7030003440	S.RESISTOR	ERJ3GEYJ 102 V (1 kΩ)
R2044	7030003440	S.RESISTOR	ERJ3GEYJ 102 V (1 kΩ)
R2045	7030003640	S.RESISTOR	ERJ3GEYJ 473 V (47 kΩ)
R2051	7030003440	S.RESISTOR	ERJ3GEYJ 102 V (1 kΩ)
R2052	7030003440	S.RESISTOR	ERJ3GEYJ 102 V (1 kΩ)
R2053	7030003440	S.RESISTOR	ERJ3GEYJ 102 V (1 kΩ)
R2054	7030003440	S.RESISTOR	ERJ3GEYJ 102 V (1 kΩ)
R2055	7030003440	S.RESISTOR	ERJ3GEYJ 102 V (1 kΩ)
R2056	7030003440	S.RESISTOR	ERJ3GEYJ 102 V (1 kΩ)
R2057	7030003440	S.RESISTOR	ERJ3GEYJ 102 V (1 kΩ)
R2058	7030003440	S.RESISTOR	ERJ3GEYJ 102 V (1 kΩ)
R2061	7030003320	S.RESISTOR	ERJ3GEYJ 101 V (100 Ω)
R2062	7030003320	S.RESISTOR	ERJ3GEYJ 101 V (100 Ω)
R2063	7030003320	S.RESISTOR	ERJ3GEYJ 101 V (100 Ω)
R2064	7030003320	S.RESISTOR	ERJ3GEYJ 101 V (100 Ω)
R2065	7030003320	S.RESISTOR	ERJ3GEYJ 101 V (100 Ω)
R2072	7030003440	S.RESISTOR	ERJ3GEYJ 102 V (1 kΩ)
R2074	7030003440	S.RESISTOR	ERJ3GEYJ 102 V (1 kΩ)
R2076	7030003800	S.RESISTOR	ERJ3GEYJ 105 V (1 MΩ)
R2077	7030003640	S.RESISTOR	ERJ3GEYJ 473 V (47 kΩ)
R2081	7030003520	S.RESISTOR	ERJ3GEYJ 472 V (4.7 kΩ)
R2084	7030003520	S.RESISTOR	ERJ3GEYJ 472 V (4.7 kΩ)
R2085	7030003520	S.RESISTOR	ERJ3GEYJ 472 V (4.7 kΩ)
R2086	7030003440	S.RESISTOR	ERJ3GEYJ 102 V (1 kΩ)
R2087	7030006560	S.RESISTOR	RR0816P-223-D (22 kΩ)
R2088	7030006560	S.RESISTOR	RR0816P-223-D (22 kΩ)
R2089	7030006560	S.RESISTOR	RR0816P-223-D (22 kΩ)
R2090	7030006560	S.RESISTOR	RR0816P-223-D (22 kΩ)
R2101	7030003520	S.RESISTOR	ERJ3GEYJ 472 V (4.7 kΩ)
R2102	7030003520	S.RESISTOR	ERJ3GEYJ 472 V (4.7 kΩ)
R2103	7030003520	S.RESISTOR	ERJ3GEYJ 472 V (4.7 kΩ)
R2104	7030003520	S.RESISTOR	ERJ3GEYJ 472 V (4.7 kΩ)
R2105	7030003520	S.RESISTOR	ERJ3GEYJ 472 V (4.7 kΩ)

S.=Surface mount

[MAIN BOARD]

REF NO.	ORDER NO.	DESCRIPTION	
R2106	7030003480	S.RESISTOR	ERJ3GEYJ 222 V (2.2 kΩ)
R2107	7030003520	S.RESISTOR	ERJ3GEYJ 472 V (4.7 kΩ)
R2108	7030003440	S.RESISTOR	ERJ3GEYJ 102 V (1 kΩ)
R2109	7030003520	S.RESISTOR	ERJ3GEYJ 472 V (4.7 kΩ)
R2110	7030003520	S.RESISTOR	ERJ3GEYJ 472 V (4.7 kΩ)
R2111	7030003680	S.RESISTOR	ERJ3GEYJ 104 V (100 kΩ)
R2112	7030003680	S.RESISTOR	ERJ3GEYJ 104 V (100 kΩ)
R2113	7030003750	S.RESISTOR	ERJ3GEYJ 394 V (390 kΩ)
R2121	7030003640	S.RESISTOR	ERJ3GEYJ 473 V (47 kΩ)
R2122	7030003640	S.RESISTOR	ERJ3GEYJ 473 V (47 kΩ)
R2123	7030003680	S.RESISTOR	ERJ3GEYJ 104 V (100 kΩ)
R2124	7030003680	S.RESISTOR	ERJ3GEYJ 104 V (100 kΩ)
R2131	7030003800	S.RESISTOR	ERJ3GEYJ 105 V (1 MΩ)
R2132	7030003640	S.RESISTOR	ERJ3GEYJ 473 V (47 kΩ)
R2133	7030003440	S.RESISTOR	ERJ3GEYJ 102 V (1 kΩ)
R2134	7030003440	S.RESISTOR	ERJ3GEYJ 102 V (1 kΩ)
R2141	7030003560	S.RESISTOR	ERJ3GEYJ 103 V (10 kΩ)
R2142	7030003440	S.RESISTOR	ERJ3GEYJ 102 V (1 kΩ)
R2143	7030003640	S.RESISTOR	ERJ3GEYJ 473 V (47 kΩ)
R2144	7030003440	S.RESISTOR	ERJ3GEYJ 102 V (1 kΩ)
R2146	7030003640	S.RESISTOR	ERJ3GEYJ 473 V (47 kΩ)
R2147	7030003440	S.RESISTOR	ERJ3GEYJ 102 V (1 kΩ)
R2148	7030003640	S.RESISTOR	ERJ3GEYJ 473 V (47 kΩ)
R2149	7030003440	S.RESISTOR	ERJ3GEYJ 102 V (1 kΩ)
R2150	7030003400	S.RESISTOR	ERJ3GEYJ 471 V (470 Ω)
R2151	7030003640	S.RESISTOR	ERJ3GEYJ 473 V (47 kΩ)
R2152	7030003640	S.RESISTOR	ERJ3GEYJ 473 V (47 kΩ)
R2161	7030003560	S.RESISTOR	ERJ3GEYJ 103 V (10 kΩ)
R2162	7030003520	S.RESISTOR	ERJ3GEYJ 472 V (4.7 kΩ)
R2163	7030003630	S.RESISTOR	ERJ3GEYJ 393 V (39 kΩ)
R2164	7030003620	S.RESISTOR	ERJ3GEYJ 333 V (33 kΩ)
R2165	7030003320	S.RESISTOR	ERJ3GEYJ 101 V (100 Ω)
R2166	7030003320	S.RESISTOR	ERJ3GEYJ 101 V (100 Ω)
R2167	7030003560	S.RESISTOR	ERJ3GEYJ 103 V (10 kΩ)
R2171	7030003680	S.RESISTOR	ERJ3GEYJ 104 V (100 kΩ)
R2172	7030003540	S.RESISTOR	ERJ3GEYJ 682 V (6.8 kΩ)
R2173	7030003620	S.RESISTOR	ERJ3GEYJ 333 V (33 kΩ)
R2174	7030003640	S.RESISTOR	ERJ3GEYJ 473 V (47 kΩ)
R2175	7030003590	S.RESISTOR	ERJ3GEYJ 183 V (18 kΩ)
R2201	7030007660	S.RESISTOR	RR0816P-331-D (330 Ω)
R2202	7030006520	S.RESISTOR	RR0816P-561-D (560 Ω)
R2203	7030003680	S.RESISTOR	ERJ3GEYJ 104 V (100 kΩ)
R2204	7030003680	S.RESISTOR	ERJ3GEYJ 104 V (100 kΩ)
R2205	7030003680	S.RESISTOR	ERJ3GEYJ 104 V (100 kΩ)
R2206	7030003680	S.RESISTOR	ERJ3GEYJ 104 V (100 kΩ)
R2207	7030003680	S.RESISTOR	ERJ3GEYJ 104 V (100 kΩ)
R2208	7030003680	S.RESISTOR	ERJ3GEYJ 104 V (100 kΩ)
R2209	7030003680	S.RESISTOR	ERJ3GEYJ 104 V (100 kΩ)
R2210	7030003680	S.RESISTOR	ERJ3GEYJ 104 V (100 kΩ)
R2211	7030003560	S.RESISTOR	ERJ3GEYJ 103 V (10 kΩ)
R2212	7030003560	S.RESISTOR	ERJ3GEYJ 103 V (10 kΩ)
R2213	7030003560	S.RESISTOR	ERJ3GEYJ 103 V (10 kΩ)
R2214	7030003560	S.RESISTOR	ERJ3GEYJ 103 V (10 kΩ)
R2215	7030003480	S.RESISTOR	ERJ3GEYJ 222 V (2.2 kΩ)
R2221	7030003320	S.RESISTOR	ERJ3GEYJ 101 V (100 Ω)
R2231	7030003320	S.RESISTOR	ERJ3GEYJ 101 V (100 Ω)
R2241	7030003420	S.RESISTOR	ERJ3GEYJ 681 V (680 Ω)
R2242	7030003420	S.RESISTOR	ERJ3GEYJ 681 V (680 Ω)
R2243	7030003420	S.RESISTOR	ERJ3GEYJ 681 V (680 Ω)
R2244	7030003410	S.RESISTOR	ERJ3GEYJ 561 V (560 Ω)
R2245	7030003360	S.RESISTOR	ERJ3GEYJ 221 V (220 Ω)
C111	4030011600	S.CERAMIC	C1608 JB 1C 104KT-N
C112	4030011600	S.CERAMIC	C1608 JB 1C 104KT-N
C113	4030011600	S.CERAMIC	C1608 JB 1C 104KT-N
C114	4030008650	S.CERAMIC	C1608 JB 1H 332K-T-A
C115	4030011330	S.CERAMIC	C1608 CH 1H 391J-T-A
C116	4030008650	S.CERAMIC	C1608 JB 1H 332K-T-A
C121	4030011600	S.CERAMIC	C1608 JB 1C 104KT-N
C122	4030008470	S.CERAMIC	C1608 JB 1H 272K-T-A
C123	4030009880	S.CERAMIC	C1608 JB 1H 682K-T-A
C124	4030009980	S.CERAMIC	C1608 JB 1H 152K-T-A
C125	4030011600	S.CERAMIC	C1608 JB 1C 104KT-N
C131	4030011600	S.CERAMIC	C1608 JB 1C 104KT-N
C132	4030011600	S.CERAMIC	C1608 JB 1C 104KT-N
C133	4030007060	S.CERAMIC	C1608 CH 1H 270J-T-A
C134	4030007080	S.CERAMIC	C1608 CH 1H 390J-T-A
C135	4030011540	S.CERAMIC	C1608 CH 1H 750J-T-A
C136	4030007020	S.CERAMIC	C1608 CH 1H 120J-T-A
C137	4030007090	S.CERAMIC	C1608 CH 1H 470J-T-A
C138	4030011600	S.CERAMIC	C1608 JB 1C 104KT-N

[MAIN BOARD]

REF NO.	ORDER NO.	DESCRIPTION	
C141	4030011600	S.CERAMIC	C1608 JB 1C 104KT-N
C153	4030011600	S.CERAMIC	C1608 JB 1C 104KT-N
C155	4030011600	S.CERAMIC	C1608 JB 1C 104KT-N
C157	4030011600	S.CERAMIC	C1608 JB 1C 104KT-N
C159	4030011600	S.CERAMIC	C1608 JB 1C 104KT-N
C161	4030011600	S.CERAMIC	C1608 JB 1C 104KT-N
C163	4030011600	S.CERAMIC	C1608 JB 1C 104KT-N
C165	4030011600	S.CERAMIC	C1608 JB 1C 104KT-N
C167	4030011600	S.CERAMIC	C1608 JB 1C 104KT-N
C168	4030007010	S.CERAMIC	C1608 CH 1H 100D-T-A
C169	4030006860	S.CERAMIC	C1608 JB 1H 102K-T-A
C171	4030011600	S.CERAMIC	C1608 JB 1C 104KT-N
C173	4030011600	S.CERAMIC	C1608 JB 1C 104KT-N
C181	4030009920	S.CERAMIC	C1608 CH 1H 050B-T-A
C182	4030009500	S.CERAMIC	C1608 CH 1H 0R5B-T-A
C183	4030009910	S.CERAMIC	C1608 CH 1H 040B-T-A
C184	4030009500	S.CERAMIC	C1608 CH 1H 0R5B-T-A
C185	4030009920	S.CERAMIC	C1608 CH 1H 050B-T-A
C186	4030007060	S.CERAMIC	C1608 CH 1H 270J-T-A
C187	4030006860	S.CERAMIC	C1608 JB 1H 102K-T-A
C188	4030006860	S.CERAMIC	C1608 JB 1H 102K-T-A
C191	4030006880	S.CERAMIC	C1608 JB 1H 472K-T-A
C192	4030006880	S.CERAMIC	C1608 JB 1H 472K-T-A
C195	4030006990	S.CERAMIC	C1608 CH 1H 080D-T-A
C196	4030007050	S.CERAMIC	C1608 CH 1H 220J-T-A
C197	4030008560	S.CERAMIC	C1608 CH 1H 300J-T-A
C201	4030006860	S.CERAMIC	C1608 JB 1H 102K-T-A
C212	4030006860	S.CERAMIC	C1608 JB 1H 102K-T-A
C222	4030011600	S.CERAMIC	C1608 JB 1C 104KT-N
C223	4030006860	S.CERAMIC	C1608 JB 1H 102K-T-A
C224	4030006860	S.CERAMIC	C1608 JB 1H 102K-T-A
C226	4030011600	S.CERAMIC	C1608 JB 1C 104KT-N
C233	4030011600	S.CERAMIC	C1608 JB 1C 104KT-N
C235	4030011600	S.CERAMIC	C1608 JB 1C 104KT-N
C236	4030007030	S.CERAMIC	C1608 CH 1H 150J-T-A
C237	4030011600	S.CERAMIC	C1608 JB 1C 104KT-N
C238	4030011600	S.CERAMIC	C1608 JB 1C 104KT-N
C239	4510005870	S.ELECTROLYTIC	ECEV1HA3R3SR
C251	4030006880	S.CERAMIC	C1608 JB 1H 472K-T-A
C253	4030011770	S.CERAMIC	C1608 CH 1H 060B-T-A
C254	4030009540	S.CERAMIC	C1608 CH 1H 1R5B-T-A
C255	4030007010	S.CERAMIC	C1608 CH 1H 100D-T-A
C256	4030009540	S.CERAMIC	C1608 CH 1H 1R5B-T-A
C257	4030007010	S.CERAMIC	C1608 CH 1H 100D-T-A
C258	4030009910	S.CERAMIC	C1608 CH 1H 040B-T-A
C259	4030009910	S.CERAMIC	C1608 CH 1H 040B-T-A
C261	4030007050	S.CERAMIC	C1608 CH 1H 220J-T-A
C262	4030007040	S.CERAMIC	C1608 CH 1H 180J-T-A
C263	4030007070	S.CERAMIC	C1608 CH 1H 330J-T-A
C264	4030006990	S.CERAMIC	C1608 CH 1H 080D-T-A
C272	4030007010	S.CERAMIC	C1608 CH 1H 100D-T-A
C273	4030006880	S.CERAMIC	C1608 JB 1H 472K-T-A
C275	4030006860	S.CERAMIC	C1608 JB 1H 102K-T-A
C276	4030006860	S.CERAMIC	C1608 JB 1H 102K-T-A
C277	4030006860	S.CERAMIC	C1608 JB 1H 102K-T-A
C278	4030006860	S.CERAMIC	C1608 JB 1H 102K-T-A
C279	4030006860	S.CERAMIC	C1608 JB 1H 102K-T-A
C281	4030006880	S.CERAMIC	C1608 JB 1H 472K-T-A
C282	4030006880	S.CERAMIC	C1608 JB 1H 472K-T-A
C283	4030006880	S.CERAMIC	C1608 JB 1H 472K-T-A
C284	4030006860	S.CERAMIC	C1608 JB 1H 102K-T-A
C285	4030007090	S.CERAMIC	C1608 CH 1H 470J-T-A
C286	4030006860	S.CERAMIC	C1608 JB 1H 102K-T-A
C287	4030006860	S.CERAMIC	C1608 JB 1H 102K-T-A
C288	4030009530	S.CERAMIC	C1608 CH 1H 030B-T-A
C289	4030006860	S.CERAMIC	C1608 JB 1H 102K-T-A
C290	4030011600	S.CERAMIC	C1608 JB 1C 104KT-N
C300	4030006860	S.CERAMIC	C1608 JB 1H 102K-T-A
C301	4030006860	S.CERAMIC	C1608 JB 1H 102K-T-A
C302	4030006860	S.CERAMIC	C1608 JB 1H 102K-T-A
C303	4030006860	S.CERAMIC	C1608 JB 1H 102K-T-A
C351	4510004630	S.ELECTROLYTIC	ECEV1CA100SR
C352	4030011600	S.CERAMIC	C1608 JB 1C 104KT-N
C361	4030011600	S.CERAMIC	C1608 JB 1C 104KT-N
C362	4030011600	S.CERAMIC	C1608 JB 1C 104KT-N
C363	4030011600	S.CERAMIC	C1608 JB 1C 104KT-N
C364	4030011600	S.CERAMIC	C1608 JB 1C 104KT-N
C365	4030011600	S.CERAMIC	C1608 JB 1C 104KT-N
C366	4030011600	S.CERAMIC	C1608 JB 1C 104KT-N
C367	4030011600	S.CERAMIC	C1608 JB 1C 104KT-N
C371	4030006850	S.CERAMIC	C1608 JB 1H 471K-T-A
C372	4030006960	S.CERAMIC	C1608 CH 1H 050C-T-A

S.=Surface mount

[MAIN BOARD]

REF NO.	ORDER NO.	DESCRIPTION	
C373	4030006960	S.CERAMIC	C1608 CH 1H 050C-T-A
C374	4030006960	S.CERAMIC	C1608 CH 1H 050C-T-A
C375	4030006960	S.CERAMIC	C1608 CH 1H 050C-T-A
C376	4030006850	S.CERAMIC	C1608 JB 1H 471K-T-A
C401	4030006880	S.CERAMIC	C1608 JB 1H 472K-T-A
C402	4030006880	S.CERAMIC	C1608 JB 1H 472K-T-A
C403	4030006880	S.CERAMIC	C1608 JB 1H 472K-T-A
C404	4030006880	S.CERAMIC	C1608 JB 1H 472K-T-A
C405	4030006880	S.CERAMIC	C1608 JB 1H 472K-T-A
C406	4030006880	S.CERAMIC	C1608 JB 1H 472K-T-A
C407	4030006880	S.CERAMIC	C1608 JB 1H 472K-T-A
C408	4030006880	S.CERAMIC	C1608 JB 1H 472K-T-A
C409	4030006880	S.CERAMIC	C1608 JB 1H 472K-T-A
C410	4030006880	S.CERAMIC	C1608 JB 1H 472K-T-A
C411	4030006880	S.CERAMIC	C1608 JB 1H 472K-T-A
C412	4030006880	S.CERAMIC	C1608 JB 1H 472K-T-A
C413	4030006880	S.CERAMIC	C1608 JB 1H 472K-T-A
C414	4030006850	S.CERAMIC	C1608 JB 1H 471K-T-A
C415	4030006850	S.CERAMIC	C1608 JB 1H 471K-T-A
C417	4030006880	S.CERAMIC	C1608 JB 1H 472K-T-A
C426	4030011600	S.CERAMIC	C1608 JB 1C 104KT-N
C432	4030006880	S.CERAMIC	C1608 JB 1H 472K-T-A
C434	4030006880	S.CERAMIC	C1608 JB 1H 472K-T-A
C439	4030006850	S.CERAMIC	C1608 JB 1H 471K-T-A
C440	4030006850	S.CERAMIC	C1608 JB 1H 471K-T-A
C445	4030006880	S.CERAMIC	C1608 JB 1H 472K-T-A
C461	4030006880	S.CERAMIC	C1608 JB 1H 472K-T-A
C462	4030006880	S.CERAMIC	C1608 JB 1H 472K-T-A
C463	4030006850	S.CERAMIC	C1608 JB 1H 471K-T-A
C465	4030006880	S.CERAMIC	C1608 JB 1H 472K-T-A
C466	4030006880	S.CERAMIC	C1608 JB 1H 472K-T-A
C467	4030006880	S.CERAMIC	C1608 JB 1H 472K-T-A
C468	4030006880	S.CERAMIC	C1608 JB 1H 472K-T-A
C469	4030006880	S.CERAMIC	C1608 JB 1H 472K-T-A
C470	4030006880	S.CERAMIC	C1608 JB 1H 472K-T-A
C471	4030006880	S.CERAMIC	C1608 JB 1H 472K-T-A
C472	4030006880	S.CERAMIC	C1608 JB 1H 472K-T-A
C473	4030006880	S.CERAMIC	C1608 JB 1H 472K-T-A
C475	4030006880	S.CERAMIC	C1608 JB 1H 472K-T-A
C476	4030006880	S.CERAMIC	C1608 JB 1H 472K-T-A
C501	4030007000	S.CERAMIC	C1608 CH 1H 090D-T-A
C502	4030007170	S.CERAMIC	C1608 CH 1H 221J-T-A
C503	4030007000	S.CERAMIC	C1608 CH 1H 090D-T-A
C504	4030007040	S.CERAMIC	C1608 CH 1H 180J-T-A
C505	4030007170	S.CERAMIC	C1608 CH 1H 221J-T-A
C506	4030006880	S.CERAMIC	C1608 JB 1H 472K-T-A
C507	4030006880	S.CERAMIC	C1608 JB 1H 472K-T-A
C511	4030006880	S.CERAMIC	C1608 JB 1H 472K-T-A
C512	4030007000	S.CERAMIC	C1608 CH 1H 090D-T-A
C513	4030007000	S.CERAMIC	C1608 CH 1H 090D-T-A
C514	4030006880	S.CERAMIC	C1608 JB 1H 472K-T-A
C515	4030006860	S.CERAMIC	C1608 JB 1H 102K-T-A
C516	4030006860	S.CERAMIC	C1608 JB 1H 102K-T-A
C521	4030006880	S.CERAMIC	C1608 JB 1H 472K-T-A
C522	4030006880	S.CERAMIC	C1608 JB 1H 472K-T-A
C523	4030011600	S.CERAMIC	C1608 JB 1C 104KT-N
C524	4030006860	S.CERAMIC	C1608 JB 1H 102K-T-A
C525	4030006880	S.CERAMIC	C1608 JB 1H 472K-T-A
C526	4030006880	S.CERAMIC	C1608 JB 1H 472K-T-A
C527	4030006880	S.CERAMIC	C1608 JB 1H 472K-T-A
C528	4030006880	S.CERAMIC	C1608 JB 1H 472K-T-A
C529	4030006880	S.CERAMIC	C1608 JB 1H 472K-T-A
C530	4030006860	S.CERAMIC	C1608 JB 1H 102K-T-A
C531	4030011600	S.CERAMIC	C1608 JB 1C 104KT-N
C532	4030009650	S.CERAMIC	C1608 CH 1H 240J-T-A
C533	4030009650	S.CERAMIC	C1608 CH 1H 240J-T-A
C534	4030011600	S.CERAMIC	C1608 JB 1C 104KT-N
C536	4030011600	S.CERAMIC	C1608 JB 1C 104KT-N
C537	4030006860	S.CERAMIC	C1608 JB 1H 102K-T-A
C541	4030007170	S.CERAMIC	C1608 CH 1H 221J-T-A
C542	4030007020	S.CERAMIC	C1608 CH 1H 120J-T-A
C543	4030007070	S.CERAMIC	C1608 CH 1H 330J-T-A
C544	4030007170	S.CERAMIC	C1608 CH 1H 221J-T-A
C545	4030007050	S.CERAMIC	C1608 CH 1H 220J-T-A
C546	4550006770	S.TANTALUM	TEMSVD2 1C 476M-12R
C552	4030007110	S.CERAMIC	C1608 CH 1H 680J-T-A
C553	4030011600	S.CERAMIC	C1608 JB 1C 104KT-N
C561	4030011600	S.CERAMIC	C1608 JB 1C 104KT-N
C562	4030007010	S.CERAMIC	C1608 CH 1H 100D-T-A
C563	4030007030	S.CERAMIC	C1608 CH 1H 150J-T-A
C564	4030009520	S.CERAMIC	C1608 CH 1H 020B-T-A
C565	4030011600	S.CERAMIC	C1608 JB 1C 104KT-N

[MAIN BOARD]

REF NO.	ORDER NO.	DESCRIPTION	
C566	4030011600	S.CERAMIC	C1608 JB 1C 104KT-N
C567	4030011280	S.CERAMIC	C1608 CH 1H 271J-T-A
C571	4030006880	S.CERAMIC	C1608 JB 1H 472K-T-A
C572	4030006880	S.CERAMIC	C1608 JB 1H 472K-T-A
C573	4030011600	S.CERAMIC	C1608 JB 1C 104KT-N
C574	4030011600	S.CERAMIC	C1608 JB 1C 104KT-N
C575	4030006880	S.CERAMIC	C1608 JB 1H 472K-T-A
C576	4030006880	S.CERAMIC	C1608 JB 1H 472K-T-A
C577	4030006880	S.CERAMIC	C1608 JB 1H 472K-T-A
C578	4030006880	S.CERAMIC	C1608 JB 1H 472K-T-A
C579	4030006880	S.CERAMIC	C1608 JB 1H 472K-T-A
C580	4030007100	S.CERAMIC	C1608 CH 1H 560J-T-A
C581	4030007100	S.CERAMIC	C1608 CH 1H 560J-T-A
C582	4030011600	S.CERAMIC	C1608 JB 1C 104KT-N
C583	4030011600	S.CERAMIC	C1608 JB 1C 104KT-N
C585	4030011600	S.CERAMIC	C1608 JB 1C 104KT-N
C587	4030011600	S.CERAMIC	C1608 JB 1C 104KT-N
C588	4030011600	S.CERAMIC	C1608 JB 1C 104KT-N
C589	4030011600	S.CERAMIC	C1608 JB 1C 104KT-N
C590	4030011600	S.CERAMIC	C1608 JB 1C 104KT-N
C591	4030011600	S.CERAMIC	C1608 JB 1C 104KT-N
C601	4030007150	S.CERAMIC	C1608 CH 1H 151J-T-A
C602	4030007060	S.CERAMIC	C1608 CH 1H 270J-T-A
C603	4030007150	S.CERAMIC	C1608 CH 1H 151J-T-A
C604	4030006880	S.CERAMIC	C1608 JB 1H 472K-T-A
C605	4030006880	S.CERAMIC	C1608 JB 1H 472K-T-A
C606	4030006880	S.CERAMIC	C1608 JB 1H 472K-T-A
C607	4030006880	S.CERAMIC	C1608 JB 1H 472K-T-A
C611	4030006880	S.CERAMIC	C1608 JB 1H 472K-T-A
C612	4030006880	S.CERAMIC	C1608 JB 1H 472K-T-A
C613	4030006880	S.CERAMIC	C1608 JB 1H 472K-T-A
C621	4030011600	S.CERAMIC	C1608 JB 1C 104KT-N
C622	4030007120	S.CERAMIC	C1608 CH 1H 820J-T-A
C623	4030011600	S.CERAMIC	C1608 JB 1C 104KT-N
C624	4030011600	S.CERAMIC	C1608 JB 1C 104KT-N
C625	4030011600	S.CERAMIC	C1608 JB 1C 104KT-N
C631	4030006880	S.CERAMIC	C1608 JB 1H 472K-T-A
C632	4030011600	S.CERAMIC	C1608 JB 1C 104KT-N
C633	4030011600	S.CERAMIC	C1608 JB 1C 104KT-N
C634	4030007040	S.CERAMIC	C1608 CH 1H 180J-T-A
C635	4030007010	S.CERAMIC	C1608 CH 1H 100D-T-A
C636	4030006860	S.CERAMIC	C1608 JB 1H 102K-T-A
C637	4030011600	S.CERAMIC	C1608 JB 1C 104KT-N
C638	4030006880	S.CERAMIC	C1608 JB 1H 472K-T-A
C639	4030011600	S.CERAMIC	C1608 JB 1C 104KT-N
C640	4030007120	S.CERAMIC	C1608 CH 1H 820J-T-A
C641	4030011600	S.CERAMIC	C1608 JB 1C 104KT-N
C642	4030007150	S.CERAMIC	C1608 CH 1H 151J-T-A
C643	4550006660	S.TANTALUM	ECST1CC226R
C644	4030007050	S.CERAMIC	C1608 CH 1H 220J-T-A
C645	4550006770	S.TANTALUM	TEMSVD2 1C 476M-12R
C646	4030011600	S.CERAMIC	C1608 JB 1C 104KT-N
C647	4550006080	S.TANTALUM	TEMSVB2 1C 106M-8L
C648	4030006880	S.CERAMIC	C1608 JB 1H 472K-T-A
C649	4030011600	S.CERAMIC	C1608 JB 1C 104KT-N
C661	4030006880	S.CERAMIC	C1608 JB 1H 472K-T-A
C662	4030006880	S.CERAMIC	C1608 JB 1H 472K-T-A
C663	4030011600	S.CERAMIC	C1608 JB 1C 104KT-N
C664	4030011600	S.CERAMIC	C1608 JB 1C 104KT-N
C671	4030006880	S.CERAMIC	C1608 JB 1H 472K-T-A
C672	4030011600	S.CERAMIC	C1608 JB 1C 104KT-N
C673	4030011600	S.CERAMIC	C1608 JB 1C 104KT-N
C681	4030007030	S.CERAMIC	C1608 CH 1H 150J-T-A
C682	4030009540	S.CERAMIC	C1608 CH 1H 1R5B-T-A
C683	4030007120	S.CERAMIC	C1608 CH 1H 820J-T-A
C684	4030011600	S.CERAMIC	C1608 JB 1C 104KT-N
C685	4030011600	S.CERAMIC	C1608 JB 1C 104KT-N
C691	4030006880	S.CERAMIC	C1608 JB 1H 472K-T-A
C692	4030011600	S.CERAMIC	C1608 JB 1C 104KT-N
C701	4030006880	S.CERAMIC	C1608 JB 1H 472K-T-A
C702	4030011600	S.CERAMIC	C1608 JB 1C 104KT-N
C703	4030011600	S.CERAMIC	C1608 JB 1C 104KT-N
C711	4030006880	S.CERAMIC	C1608 JB 1H 472K-T-A
C712	4030011600	S.CERAMIC	C1608 JB 1C 104KT-N
C713	4030011600	S.CERAMIC	C1608 JB 1C 104KT-N
C721	4030007050	S.CERAMIC	C1608 CH 1H 220J-T-A
C722	4030011600	S.CERAMIC	C1608 JB 1C 104KT-N
C731	4030006880	S.CERAMIC	C1608 JB 1H 472K-T-A
C732	4030006880	S.CERAMIC	C1608 JB 1H 472K-T-A
C733	4030011600	S.CERAMIC	C1608 JB 1C 104KT-N
C734	4030007090	S.CERAMIC	C1608 CH 1H 470J-T-A
C735	4030011600	S.CERAMIC	C1608 JB 1C 104KT-N

S.=Surface mount

[MAIN BOARD]

REF NO.	ORDER NO.	DESCRIPTION	
C736	4030011600	S.CERAMIC	C1608 JB 1C 104KT-N
C741	4030006880	S.CERAMIC	C1608 JB 1H 472K-T-A
C742	4030007090	S.CERAMIC	C1608 CH 1H 470J-T-A
C743	4030011600	S.CERAMIC	C1608 JB 1C 104KT-N
C751	4030007170	S.CERAMIC	C1608 CH 1H 221J-T-A
C752	4030011600	S.CERAMIC	C1608 JB 1C 104KT-N
C761	4030006880	S.CERAMIC	C1608 JB 1H 472K-T-A
C762	4030006870	S.CERAMIC	C1608 JB 1H 222K-T-A
C763	4030006880	S.CERAMIC	C1608 JB 1H 472K-T-A
C764	4030006900	S.CERAMIC	C1608 JB 1E 103K-T-A
C771	4030007150	S.CERAMIC	C1608 CH 1H 151J-T-A
C772	4030007130	S.CERAMIC	C1608 CH 1H 101J-T-A
C773	4030006880	S.CERAMIC	C1608 JB 1H 472K-T-A
C774	4030012610	S.CERAMIC	C2012 JB 1C 474K-T-A
C775	4510004630	S.ELECTROLYTIC	ECEV1CA100SR
C776	4030011600	S.CERAMIC	C1608 JB 1C 104KT-N
C777	4030006880	S.CERAMIC	C1608 JB 1H 472K-T-A
C778	4030006880	S.CERAMIC	C1608 JB 1H 472K-T-A
C779	4550006690	S.TANTALUM	ECST1AC476R
C791	4030006880	S.CERAMIC	C1608 JB 1H 472K-T-A
C792	4030006880	S.CERAMIC	C1608 JB 1H 472K-T-A
C793	4030006880	S.CERAMIC	C1608 JB 1H 472K-T-A
C794	4510004430	S.ELECTROLYTIC	ECEV1CV220WR
C795	4030007130	S.CERAMIC	C1608 CH 1H 101J-T-A
C796	4030011600	S.CERAMIC	C1608 JB 1C 104KT-N
C797	4030006880	S.CERAMIC	C1608 JB 1H 472K-T-A
C798	4030006900	S.CERAMIC	C1608 JB 1E 103K-T-A
C799	4030007170	S.CERAMIC	C1608 CH 1H 221J-T-A
C800	4030007170	S.CERAMIC	C1608 CH 1H 221J-T-A
C801	4030011600	S.CERAMIC	C1608 JB 1C 104KT-N
C802	4030011600	S.CERAMIC	C1608 JB 1C 104KT-N
C803	4030010210	S.CERAMIC	C3216 JB 1C 105M-T-A
C811	4030011600	S.CERAMIC	C1608 JB 1C 104KT-N
C812	4030006900	S.CERAMIC	C1608 JB 1E 103K-T-A
C813	4030006900	S.CERAMIC	C1608 JB 1E 103K-T-A
C814	4030011600	S.CERAMIC	C1608 JB 1C 104KT-N
C815	4510004630	S.ELECTROLYTIC	ECEV1CA100SR
C821	4030011600	S.CERAMIC	C1608 JB 1C 104KT-N
C822	4030008910	S.CERAMIC	C1608 JB 1C 393K-T-A
C823	4030011600	S.CERAMIC	C1608 JB 1C 104KT-N
C824	4030009980	S.CERAMIC	C1608 JB 1H 152K-T-A
C825	4030011600	S.CERAMIC	C1608 JB 1C 104KT-N
C826	4030011600	S.CERAMIC	C1608 JB 1C 104KT-N
C827	4030006880	S.CERAMIC	C1608 JB 1H 472K-T-A
C828	4030007130	S.CERAMIC	C1608 CH 1H 101J-T-A
C841	4030006880	S.CERAMIC	C1608 JB 1H 472K-T-A
C842	4030006880	S.CERAMIC	C1608 JB 1H 472K-T-A
C843	4030011600	S.CERAMIC	C1608 JB 1C 104KT-N
C844	4030011600	S.CERAMIC	C1608 JB 1C 104KT-N
C845	4030011600	S.CERAMIC	C1608 JB 1C 104KT-N
C846	4030006880	S.CERAMIC	C1608 JB 1H 472K-T-A
C847	4030006880	S.CERAMIC	C1608 JB 1H 472K-T-A
C848	4510004630	S.ELECTROLYTIC	ECEV1CA100SR
C849	4030008920	S.CERAMIC	C1608 JB 1C 473K-T-A
C850	4030011600	S.CERAMIC	C1608 JB 1C 104KT-N
C851	4030007130	S.CERAMIC	C1608 CH 1H 101J-T-A
C861	4510004630	S.ELECTROLYTIC	ECEV1CA100SR
C862	4030006880	S.CERAMIC	C1608 JB 1H 472K-T-A
C881	4030006880	S.CERAMIC	C1608 JB 1H 472K-T-A
C882	4030006870	S.CERAMIC	C1608 JB 1H 222K-T-A
C883	4030008680	S.CERAMIC	C2012 JF 1C 105Z-T-A
C891	4030011600	S.CERAMIC	C1608 JB 1C 104KT-N
C892	4030006900	S.CERAMIC	C1608 JB 1E 103K-T-A
C893	4030006860	S.CERAMIC	C1608 JB 1H 102K-T-A
C894	4030006880	S.CERAMIC	C1608 JB 1H 472K-T-A
C895	4030010210	S.CERAMIC	C3216 JB 1C 105M-T-A
C896	4030011600	S.CERAMIC	C1608 JB 1C 104KT-N
C897	4030008680	S.CERAMIC	C2012 JF 1C 105Z-T-A
C898	4030011600	S.CERAMIC	C1608 JB 1C 104KT-N
C899	4030006860	S.CERAMIC	C1608 JB 1H 102K-T-A
C921	4030010210	S.CERAMIC	C3216 JB 1C 105M-T-A
C922	4550006390	S.TANTALUM	TEMSVA 1C 335M-8L
C923	4510004430	S.ELECTROLYTIC	ECEV1CV220WR
C931	4030010210	S.CERAMIC	C3216 JB 1C 105M-T-A
C932	4030006850	S.CERAMIC	C1608 JB 1H 471K-T-A
C933	4510005860	S.ELECTROLYTIC	ECEV1HA2R2SR
C934	4030006850	S.CERAMIC	C1608 JB 1H 471K-T-A
C935	4030008920	S.CERAMIC	C1608 JB 1C 473K-T-A
C936	4030011600	S.CERAMIC	C1608 JB 1C 104KT-N
C937	4030011600	S.CERAMIC	C1608 JB 1C 104KT-N
C938	4030007130	S.CERAMIC	C1608 CH 1H 101J-T-A
C939	4030010210	S.CERAMIC	C3216 JB 1C 105M-T-A

[MAIN BOARD]

REF NO.	ORDER NO.	DESCRIPTION	
C940	4510004630	S.ELECTROLYTIC	ECEV1CA100SR
C941	4510004430	S.ELECTROLYTIC	ECEV1CV220WR
C942	4030011600	S.CERAMIC	C1608 JB 1C 104KT-N
C943	4030008910	S.CERAMIC	C1608 JB 1C 393K-T-A
C944	4030011600	S.CERAMIC	C1608 JB 1C 104KT-N
C945	4030010210	S.CERAMIC	C3216 JB 1C 105M-T-A
C946	4030011600	S.CERAMIC	C1608 JB 1C 104KT-N
C961	4030012610	S.CERAMIC	C2012 JB 1C 474K-T-A
C963	4510004630	S.ELECTROLYTIC	ECEV1CA100SR
C964	4030010210	S.CERAMIC	C3216 JB 1C 105M-T-A
C971	4030006880	S.CERAMIC	C1608 JB 1H 472K-T-A
C981	4510004630	S.ELECTROLYTIC	ECEV1CA100SR
C982	4030011600	S.CERAMIC	C1608 JB 1C 104KT-N
C983	4030011600	S.CERAMIC	C1608 JB 1C 104KT-N
C984	4030011600	S.CERAMIC	C1608 JB 1C 104KT-N
C985	4030011600	S.CERAMIC	C1608 JB 1C 104KT-N
C986	4030011600	S.CERAMIC	C1608 JB 1C 104KT-N
C987	4030006860	S.CERAMIC	C1608 JB 1H 102K-T-A
C988	4030006870	S.CERAMIC	C1608 JB 1H 222K-T-A
C989	4030007140	S.CERAMIC	C1608 CH 1H 121J-T-A
C1011	4030006880	S.CERAMIC	C1608 JB 1H 472K-T-A
C1012	4030011600	S.CERAMIC	C1608 JB 1C 104KT-N
C1013	4550006930	S.TANTALUM	TESVSP 0J 225M-8R
C1014	4030006880	S.CERAMIC	C1608 JB 1H 472K-T-A
C1015	4030006880	S.CERAMIC	C1608 JB 1H 472K-T-A
C1016	4510004630	S.ELECTROLYTIC	ECEV1CA100SR
C1017	4030011600	S.CERAMIC	C1608 JB 1C 104KT-N
C1018	4030010210	S.CERAMIC	C3216 JB 1C 105M-T-A
C1019	4030006880	S.CERAMIC	C1608 JB 1H 472K-T-A
C1020	4030007110	S.CERAMIC	C1608 CH 1H 680J-T-A
C1021	4030007100	S.CERAMIC	C1608 CH 1H 560J-T-A
C1022	4610002140	S.TRIMMER	CTZ3S-20C-WI-PF
C1023	4030007150	S.CERAMIC	C1608 CH 1H 151J-T-A
C1024	4030007150	S.CERAMIC	C1608 CH 1H 151J-T-A
C1025	4030007150	S.CERAMIC	C1608 CH 1H 151J-T-A
C1026	4030006880	S.CERAMIC	C1608 JB 1H 472K-T-A
C1027	4030007010	S.CERAMIC	C1608 CH 1H 100D-T-A
C1028	4030006880	S.CERAMIC	C1608 JB 1H 472K-T-A
C1029	4030007020	S.CERAMIC	C1608 CH 1H 120J-T-A
C1030	4510004630	S.ELECTROLYTIC	ECEV1CA100SR
C1031	4030006880	S.CERAMIC	C1608 JB 1H 472K-T-A
C1032	4030006880	S.CERAMIC	C1608 JB 1H 472K-T-A
C1033	4030007050	S.CERAMIC	C1608 CH 1H 220J-T-A
C1041	4030010210	S.CERAMIC	C3216 JB 1C 105M-T-A
C1043	4030011600	S.CERAMIC	C1608 JB 1C 104KT-N
C1044	4030006880	S.CERAMIC	C1608 JB 1H 472K-T-A
C1045	4510004630	S.ELECTROLYTIC	ECEV1CA100SR
C1046	4030011600	S.CERAMIC	C1608 JB 1C 104KT-N
C1047	4510004630	S.ELECTROLYTIC	ECEV1CA100SR
C1048	4030011600	S.CERAMIC	C1608 JB 1C 104KT-N
C1049	4030006880	S.CERAMIC	C1608 JB 1H 472K-T-A
C1050	4030006880	S.CERAMIC	C1608 JB 1H 472K-T-A
C1051	4030011600	S.CERAMIC	C1608 JB 1C 104KT-N
C1052	4030011600	S.CERAMIC	C1608 JB 1C 104KT-N
C1053	4510004630	S.ELECTROLYTIC	ECEV1CA100SR
C1061	4510004630	S.ELECTROLYTIC	ECEV1CA100SR
C1091	4510004630	S.ELECTROLYTIC	ECEV1CA100SR
C1094	4030010210	S.CERAMIC	C3216 JB 1C 105M-T-A
C1095	4030006880	S.CERAMIC	C1608 JB 1H 472K-T-A
C1096	4030009990	S.CERAMIC	C1608 CH 1H 200J-T-A
C1141	4030012610	S.CERAMIC	C2012 JB 1C 474K-T-A
C1142	4030006880	S.CERAMIC	C1608 JB 1H 472K-T-A
C1143	4510004630	S.ELECTROLYTIC	ECEV1CA100SR
C1144	4030011600	S.CERAMIC	C1608 JB 1C 104KT-N
C1145	4030012610	S.CERAMIC	C2012 JB 1C 474K-T-A
C1161	4030012610	S.CERAMIC	C2012 JB 1C 474K-T-A
C1162	4030011600	S.CERAMIC	C1608 JB 1C 104KT-N
C1163	4030011600	S.CERAMIC	C1608 JB 1C 104KT-N
C1164	4030011600	S.CERAMIC	C1608 JB 1C 104KT-N
C1165	4030011600	S.CERAMIC	C1608 JB 1C 104KT-N
C1381	4030006880	S.CERAMIC	C1608 JB 1H 472K-T-A
C1382	4030006880	S.CERAMIC	C1608 JB 1H 472K-T-A
C1390	4030006860	S.CERAMIC	C1608 JB 1H 102K-T-A
C1391	4030006880	S.CERAMIC	C1608 JB 1H 472K-T-A
C1394	4030006880	S.CERAMIC	C1608 JB 1H 472K-T-A
C1397	4030006880	S.CERAMIC	C1608 JB 1H 472K-T-A
C1410	4030006880	S.CERAMIC	C1608 JB 1H 472K-T-A
C1421	4030006850	S.CERAMIC	C1608 JB 1H 471K-T-A
C1426	4030006880	S.CERAMIC	C1608 JB 1H 472K-T-A
C1427	4030006880	S.CERAMIC	C1608 JB 1H 472K-T-A
C1428	4030006880	S.CERAMIC	C1608 JB 1H 472K-T-A
C2001	4030006880	S.CERAMIC	C1608 JB 1H 472K-T-A

S.=Surface mount

[MAIN BOARD]

REF NO.	ORDER NO.	DESCRIPTION	
C2002	4030006880	S.CERAMIC	C1608 JB 1H 472K-T-A
C2003	4030006880	S.CERAMIC	C1608 JB 1H 472K-T-A
C2004	4030011600	S.CERAMIC	C1608 JB 1C 104KT-N
C2011	4030007090	S.CERAMIC	C1608 CH 1H 470J-T-A
C2012	4030007090	S.CERAMIC	C1608 CH 1H 470J-T-A
C2013	4030006880	S.CERAMIC	C1608 JB 1H 472K-T-A
C2014	4030006880	S.CERAMIC	C1608 JB 1H 472K-T-A
C2016	4030006880	S.CERAMIC	C1608 JB 1H 472K-T-A
C2017	4030006880	S.CERAMIC	C1608 JB 1H 472K-T-A
C2018	4030006880	S.CERAMIC	C1608 JB 1H 472K-T-A
C2019	4030006880	S.CERAMIC	C1608 JB 1H 472K-T-A
C2022	4030006880	S.CERAMIC	C1608 JB 1H 472K-T-A
C2041	4030006880	S.CERAMIC	C1608 JB 1H 472K-T-A
C2042	4030006880	S.CERAMIC	C1608 JB 1H 472K-T-A
C2044	4030006880	S.CERAMIC	C1608 JB 1H 472K-T-A
C2059	4030011600	S.CERAMIC	C1608 JB 1C 104KT-N
C2061	4030007090	S.CERAMIC	C1608 CH 1H 470J-T-A
C2062	4030007090	S.CERAMIC	C1608 CH 1H 470J-T-A
C2063	4030007090	S.CERAMIC	C1608 CH 1H 470J-T-A
C2064	4030007090	S.CERAMIC	C1608 CH 1H 470J-T-A
C2065	4030007090	S.CERAMIC	C1608 CH 1H 470J-T-A
C2066	4030011600	S.CERAMIC	C1608 JB 1C 104KT-N
C2071	4030006880	S.CERAMIC	C1608 JB 1H 472K-T-A
C2072	4030006880	S.CERAMIC	C1608 JB 1H 472K-T-A
C2073	4030006880	S.CERAMIC	C1608 JB 1H 472K-T-A
C2074	4030006880	S.CERAMIC	C1608 JB 1H 472K-T-A
C2075	4030006880	S.CERAMIC	C1608 JB 1H 472K-T-A
C2076	4030009590	S.CERAMIC	C2012 JF 1C 225Z-T-A
C2081	4030006880	S.CERAMIC	C1608 JB 1H 472K-T-A
C2082	4030006880	S.CERAMIC	C1608 JB 1H 472K-T-A
C2083	4030006880	S.CERAMIC	C1608 JB 1H 472K-T-A
C2084	4030006880	S.CERAMIC	C1608 JB 1H 472K-T-A
C2085	4030006880	S.CERAMIC	C1608 JB 1H 472K-T-A
C2086	4030012610	S.CERAMIC	C2012 JB 1C 474K-T-A
C2101	4030011600	S.CERAMIC	C1608 JB 1C 104KT-N
C2121	4030011600	S.CERAMIC	C1608 JB 1C 104KT-N
C2122	4030011600	S.CERAMIC	C1608 JB 1C 104KT-N
C2123	4030007090	S.CERAMIC	C1608 CH 1H 470J-T-A
C2131	4030011600	S.CERAMIC	C1608 JB 1C 104KT-N
C2141	4030006880	S.CERAMIC	C1608 JB 1H 472K-T-A
C2142	4030006880	S.CERAMIC	C1608 JB 1H 472K-T-A
C2143	4030006880	S.CERAMIC	C1608 JB 1H 472K-T-A
C2144	4030006880	S.CERAMIC	C1608 JB 1H 472K-T-A
C2145	4030006880	S.CERAMIC	C1608 JB 1H 472K-T-A
C2146	4030006880	S.CERAMIC	C1608 JB 1H 472K-T-A
C2147	4030006850	S.CERAMIC	C1608 JB 1H 471K-T-A
C2161	4030007020	S.CERAMIC	C1608 CH 1H 120J-T-A
C2162	4030007020	S.CERAMIC	C1608 CH 1H 120J-T-A
C2163	4030011600	S.CERAMIC	C1608 JB 1C 104KT-N
C2164	4030008890	S.CERAMIC	C1608 JB 1C 273K-T-A
C2165	4030006880	S.CERAMIC	C1608 JB 1H 472K-T-A
C2166	4030011600	S.CERAMIC	C1608 JB 1C 104KT-N
C2181	4030010210	S.CERAMIC	C3216 JB 1C 105M-T-A
C2201	4030011600	S.CERAMIC	C1608 JB 1C 104KT-N
C2202	4030011600	S.CERAMIC	C1608 JB 1C 104KT-N
C2221	4030011600	S.CERAMIC	C1608 JB 1C 104KT-N
C2222	4030011600	S.CERAMIC	C1608 JB 1C 104KT-N
C2223	4030007090	S.CERAMIC	C1608 CH 1H 470J-T-A
C2231	4020000970	CYLINDER	UP050B 472K Z
C2232	4030011600	S.CERAMIC	C1608 JB 1C 104KT-N
C2233	4030011600	S.CERAMIC	C1608 JB 1C 104KT-N
C2234	4030011600	S.CERAMIC	C1608 JB 1C 104KT-N
C2235	4030006850	S.CERAMIC	C1608 JB 1H 471K-T-A
C2236	4030006850	S.CERAMIC	C1608 JB 1H 471K-T-A
C2237	4030006850	S.CERAMIC	C1608 JB 1H 471K-T-A
C2238	4030006850	S.CERAMIC	C1608 JB 1H 471K-T-A
C2239	4030006860	S.CERAMIC	C1608 JB 1H 102K-T-A
C2240	4030006860	S.CERAMIC	C1608 JB 1H 102K-T-A
C2250	4030006860	S.CERAMIC	C1608 JB 1H 102K-T-A
C2251	4030007090	S.CERAMIC	C1608 CH 1H 470J-T-A
C2252	4030007090	S.CERAMIC	C1608 CH 1H 470J-T-A
C2253	4030006860	S.CERAMIC	C1608 JB 1H 102K-T-A
J1	6510021280	S.CONNECTOR	AXK6S20645P
J101	6510007020	CONNECTOR	TMP-J01X-V6
J141	6510007020	CONNECTOR	TMP-J01X-V6
J231	6510007020	CONNECTOR	TMP-J01X-V6
J281	6510007020	CONNECTOR	TMP-J01X-V6
J401	6510020080	S.CONNECTOR	52808-2090
J431	6510020080	S.CONNECTOR	52808-2090
J461	6510020080	S.CONNECTOR	52808-2090

[MAIN BOARD]

REF NO.	ORDER NO.	DESCRIPTION	
J551	6510007020	CONNECTOR	TMP-J01X-V6
J701	6450001560	CONNECTOR	PD-72
J702	6450001560	CONNECTOR	PD-72
J703	6450001560	CONNECTOR	PD-72
J704	6450001560	CONNECTOR	PD-72
J705	6510020380	CONNECTOR	JS0330-GT
J706	6510020380	CONNECTOR	JS0330-GT
J711	6450001560	CONNECTOR	PD-72
J712	6450001560	CONNECTOR	PD-72
J713	6450001560	CONNECTOR	PD-72
J714	6450001560	CONNECTOR	PD-72
J715	6510020380	CONNECTOR	JS0330-GT
J716	6510020380	CONNECTOR	JS0330-GT
J791	6510018960	S.CONNECTOR	B2B-PH-SM3-TB
J1381	6510019070	S.CONNECTOR	52559-3092
J1421	6510020090	S.CONNECTOR	52808-0890
J1431	6510018970	S.CONNECTOR	B4B-PH-SM3-TB
J2061	6510019190	S.CONNECTOR	52365-0891
W201	7030003860	S.JUMPER	ERJ3GE JPW V
W202	7030003860	S.JUMPER	ERJ3GE JPW V
W231	7030008240	S.JUMPER	ERJ12YJ0R00H
W301	7030003860	S.JUMPER	ERJ3GE JPW V
W302	7030000010	S.JUMPER	MCR10EZHJ JPW (000)
W303	7030000010	S.JUMPER	MCR10EZHJ JPW (000)
W461	7030003860	S.JUMPER	ERJ3GE JPW V
W514	7030003860	S.JUMPER	ERJ3GE JPW V
W844	7030003860	S.JUMPER	ERJ3GE JPW V
W1056	7030003860	S.JUMPER	ERJ3GE JPW V
W1078	7030003860	S.JUMPER	ERJ3GE JPW V
W1433	7030003860	S.JUMPER	ERJ3GE JPW V
W2001	7030003860	S.JUMPER	ERJ3GE JPW V
W2061	7030000010	S.JUMPER	MCR10EZHJ JPW (000)
W2101	7030003860	S.JUMPER	ERJ3GE JPW V
WS1	8970023330	M.OTHER	SX2177 J LEAD SET (3)/MA
EP1	0910050946	PCB	B 5209F

[HPF BOARD]

REF NO.	ORDER NO.	DESCRIPTION	
Q191	1560000720	S.FET	2SK2171-4-TD
Q211	1520000560	S.TRANSISTOR	2SB1123T-TD
Q212	1590002310	S.TRANSISTOR	DTC114EE TL
Q213	1590002310	S.TRANSISTOR	DTC114EE TL
Q214	1590002480	S.TRANSISTOR	UMC3N TR
Q215	1590002310	S.TRANSISTOR	DTC114EE TL
D101	1790001260	S.DIODE	MA2S077-(TX)
D111	1790001260	S.DIODE	MA2S077-(TX)
D112	1790001260	S.DIODE	MA2S077-(TX)
D121	1790001260	S.DIODE	MA2S077-(TX)
D122	1790001260	S.DIODE	MA2S077-(TX)
D131	1790001260	S.DIODE	MA2S077-(TX)
D132	1790001260	S.DIODE	MA2S077-(TX)
D141	1790001260	S.DIODE	MA2S077-(TX)
D142	1790001260	S.DIODE	MA2S077-(TX)
D151	1790001260	S.DIODE	MA2S077-(TX)
D152	1790001260	S.DIODE	MA2S077-(TX)
D161	1790001260	S.DIODE	MA2S077-(TX)
D162	1790001260	S.DIODE	MA2S077-(TX)
D171	1790001260	S.DIODE	MA2S077-(TX)
D172	1790001260	S.DIODE	MA2S077-(TX)
D191	1790001260	S.DIODE	MA2S077-(TX)
D192	1790001260	S.DIODE	MA2S077-(TX)
D211	1750000520	S.DIODE	DAN222TL
D212	1750000520	S.DIODE	DAN222TL
L101	6200002910	S.COIL	NL 252018T-R27J
L102	6200004960	S.COIL	NL 252018T-R33J
L111	6200003240	S.COIL	NL 322522T-221J

S.=Surface mount

[HPF BOARD]

REF NO.	ORDER NO.	DESCRIPTION	
L121	6200002040	S.COIL	NL 252018T-101J
L122	6200007170	S.COIL	MLF1608A 3R3K-T
L123	6200003550	S.COIL	MLF1608A 4R7K-T
L124	6200002040	S.COIL	NL 252018T-101J
L131	6200004920	S.COIL	MLF1608A 2R2K-T
L132	6200004660	S.COIL	MLF1608A 1R8K-T
L133	6200004660	S.COIL	MLF1608A 1R8K-T
L134	6200002040	S.COIL	NL 252018T-101J
L141	6200003960	S.COIL	MLF1608A 1R0K-T
L142	6200003960	S.COIL	MLF1608A 1R0K-T
L143	6200003960	S.COIL	MLF1608A 1R0K-T
L144	6200002040	S.COIL	NL 252018T-101J
L151	6200002040	S.COIL	NL 252018T-101J
L152	6200001700	S.COIL	MLF2012D R47K-T
L153	6200001200	S.COIL	MLF2012D R56M-T
L154	6200001210	S.COIL	MLF2012D R68M-T
L155	6200001060	S.COIL	MLF2012D 47NM-T
L161	6200002040	S.COIL	NL 252018T-101J
L162	6200001170	S.COIL	MLF2012D R33M-T
L163	6200001180	S.COIL	MLF2012D R39K-T
L164	6200002040	S.COIL	NL 252018T-101J
L171	6200005010	S.COIL	NL 252018T-100J
L172	6200001090	S.COIL	MLF2012D 68NM-T
L173	6200001100	S.COIL	MLF2012D 82NM-T
L174	6200001870	S.COIL	MLF2012D R27K-T
L175	6200001130	S.COIL	MLF2012D R15M-T
L176	6200005010	S.COIL	NL 252018T-100J
L191	6200005010	S.COIL	NL 252018T-100J
L192	6200003840	S.COIL	MLF2012D R22K-T
L193	6200001170	S.COIL	MLF2012D R33M-T
L194	6200003280	S.COIL	NL 252018T-2R2J
L195	6140002810	S.COIL	LR-317
L196	6200001500	S.COIL	MLF2012D R12K-T
L197	6200004150	S.COIL	MLF1608D 47NM-T
R101	7030003760	S.RESISTOR	ERJ3GEYJ 474 V (470 kΩ)
R102	7030003760	S.RESISTOR	ERJ3GEYJ 474 V (470 kΩ)
R111	7030003320	S.RESISTOR	ERJ3GEYJ 101 V (100 Ω)
R171	7030003720	S.RESISTOR	ERJ3GEYJ 224 V (220 kΩ)
R172	7030003320	S.RESISTOR	ERJ3GEYJ 101 V (100 Ω)
R191	7030003720	S.RESISTOR	ERJ3GEYJ 224 V (220 kΩ)
R192	7030003280	S.RESISTOR	ERJ3GEYJ 470 V (47 Ω)
R193	7030003340	S.RESISTOR	ERJ3GEYJ 151 V (150 Ω)
R194	7030004050	S.RESISTOR	ERJ3GEYJ 1R0 V (1 Ω)
R195	7030003280	S.RESISTOR	ERJ3GEYJ 470 V (47 Ω)
R211	7030003560	S.RESISTOR	ERJ3GEYJ 103 V (10 kΩ)
R212	7030003520	S.RESISTOR	ERJ3GEYJ 472 V (4.7 kΩ)
R213	7030003560	S.RESISTOR	ERJ3GEYJ 103 V (10 kΩ)
R214	7030003560	S.RESISTOR	ERJ3GEYJ 103 V (10 kΩ)
C101	4030007110	S.CERAMIC	C1608 CH 1H 680J-T-A
C102	4030007060	S.CERAMIC	C1608 CH 1H 270J-T-A
C103	4030007150	S.CERAMIC	C1608 CH 1H 151J-T-A
C104	4030007010	S.CERAMIC	C1608 CH 1H 100D-T-A
C105	4030007120	S.CERAMIC	C1608 CH 1H 820J-T-A
C111	4030010210	S.CERAMIC	C3216 JB 1C 105M-T-A
C121	4030011600	S.CERAMIC	C1608 JB 1C 104KT-N
C122	4030008470	S.CERAMIC	C1608 JB 1H 272K-T-A
C123	4030008860	S.CERAMIC	C1608 JB 1C 153K-T-A
C124	4030009980	S.CERAMIC	C1608 JB 1H 152K-T-A
C125	4030011600	S.CERAMIC	C1608 JB 1C 104KT-N
C126	4030006880	S.CERAMIC	C1608 JB 1H 472K-T-A
C131	4030011600	S.CERAMIC	C1608 JB 1C 104KT-N
C132	4030009580	S.CERAMIC	C1608 JB 1H 681K-T-A
C133	4030009980	S.CERAMIC	C1608 JB 1H 152K-T-A
C134	4030009580	S.CERAMIC	C1608 JB 1H 681K-T-A
C135	4030008470	S.CERAMIC	C1608 JB 1H 272K-T-A
C136	4030006860	S.CERAMIC	C1608 JB 1H 102K-T-A
C141	4030011600	S.CERAMIC	C1608 JB 1C 104KT-N
C142	4030010240	S.CERAMIC	C1608 JB 1H 391K-T-A
C143	4030010030	S.CERAMIC	C1608 SL 1H 511J-T-A
C144	4030010760	S.CERAMIC	C1608 CH 1H 331J-T-A
C145	4030006860	S.CERAMIC	C1608 JB 1H 102K-T-A
C146	4030009580	S.CERAMIC	C1608 JB 1H 681K-T-A
C147	4030011600	S.CERAMIC	C1608 JB 1C 104KT-N
C151	4030011600	S.CERAMIC	C1608 JB 1C 104KT-N
C152	4030007160	S.CERAMIC	C1608 CH 1H 181J-T-A
C153	4030006860	S.CERAMIC	C1608 JB 1H 102K-T-A
C154	4030007150	S.CERAMIC	C1608 CH 1H 151J-T-A
C155	4030011330	S.CERAMIC	C1608 CH 1H 391J-T-A

[HPF BOARD]

REF NO.	ORDER NO.	DESCRIPTION	
C156	4030007170	S.CERAMIC	C1608 CH 1H 221J-T-A
C161	4030011600	S.CERAMIC	C1608 JB 1C 104KT-N
C162	4030007170	S.CERAMIC	C1608 CH 1H 221J-T-A
C163	4030010020	S.CERAMIC	C1608 JB 1H 122K-T-A
C164	4030007130	S.CERAMIC	C1608 CH 1H 101J-T-A
C165	4030010760	S.CERAMIC	C1608 CH 1H 331J-T-A
C166	4030006880	S.CERAMIC	C1608 JB 1H 472K-T-A
C171	4030006900	S.CERAMIC	C1608 JB 1E 103K-T-A
C172	4030007080	S.CERAMIC	C1608 CH 1H 390J-T-A
C173	4030011540	S.CERAMIC	C1608 CH 1H 750J-T-A
C174	4030007150	S.CERAMIC	C1608 CH 1H 151J-T-A
C175	4030009650	S.CERAMIC	C1608 CH 1H 240J-T-A
C176	4030007150	S.CERAMIC	C1608 CH 1H 151J-T-A
C177	4030007140	S.CERAMIC	C1608 CH 1H 121J-T-A
C178	4030007110	S.CERAMIC	C1608 CH 1H 680J-T-A
C179	4030007090	S.CERAMIC	C1608 CH 1H 470J-T-A
C180	4030010760	S.CERAMIC	C1608 CH 1H 331J-T-A
C181	4030007120	S.CERAMIC	C1608 CH 1H 820J-T-A
C182	4030006900	S.CERAMIC	C1608 JB 1E 103K-T-A
C191	4030006880	S.CERAMIC	C1608 JB 1H 472K-T-A
C192	4030006900	S.CERAMIC	C1608 JB 1E 103K-T-A
C193	4030007100	S.CERAMIC	C1608 CH 1H 560J-T-A
C194	4030007160	S.CERAMIC	C1608 CH 1H 181J-T-A
C195	4030007070	S.CERAMIC	C1608 CH 1H 330J-T-A
C196	4030006900	S.CERAMIC	C1608 JB 1E 103K-T-A
C197	4030006900	S.CERAMIC	C1608 JB 1E 103K-T-A
C198	4030007080	S.CERAMIC	C1608 CH 1H 390J-T-A
C199	4030007030	S.CERAMIC	C1608 CH 1H 150J-T-A
C200	4030007080	S.CERAMIC	C1608 CH 1H 390J-T-A
J101	6510021270	S.CONNECTOR	AXK5S20045P
EP1	0910050954	PCB	B 5222D

[PLL UNIT]

REF NO.	ORDER NO.	DESCRIPTION	
IC101	1140003641	S.IC	SC-1246
IC201	1110003300	S.IC	M5282FP 70CD
IC231	1110003090	IC	LA4425A
IC271	1180000420	S.IC	TA78L05F (TE12R)
IC281	1110002030	IC	TA7808S
IC291	1180001070	S.IC	TA7805F (TE16L)
IC461	1130009230	S.IC	LMX2306TMX
IC541	1110003320	S.IC	µPC2710T-E3
IC901	1140004550	S.IC	M65343FP/SC1287
Q1	1560000330	S.FET	2SK210-GR (TE85R)
Q10	1530002570	S.TRANSISTOR	2SC4405-3-TL
Q21	1530002060	S.TRANSISTOR	2SC4081 T107 R
Q51	1530002060	S.TRANSISTOR	2SC4081 T107 R
Q71	1530002060	S.TRANSISTOR	2SC4081 T107 R
Q141	1590001330	S.TRANSISTOR	DTA114EUA T106
Q142	1590001330	S.TRANSISTOR	DTA114EUA T106
Q143	1590001330	S.TRANSISTOR	DTA114EUA T106
Q144	1590001330	S.TRANSISTOR	DTA114EUA T106
Q145	1590001330	S.TRANSISTOR	DTA114EUA T106
Q161	1530002560	S.TRANSISTOR	2SC4403-3-TL
Q232	1590000680	S.TRANSISTOR	DTC114EUA T106
Q251	1590000720	S.TRANSISTOR	DTA144EUA T106
Q261	1590002310	S.TRANSISTOR	DTC114EE TL
Q301	1560000490	S.FET	2SK508 K52 T2B
Q321	1530003090	S.TRANSISTOR	2SC4213-B (TE85R)
Q322	1590000720	S.TRANSISTOR	DTA144EUA T106
Q331	1560000490	S.FET	2SK508 K52 T2B
Q351	1530003090	S.TRANSISTOR	2SC4213-B (TE85R)
Q352	1590000720	S.TRANSISTOR	DTA144EUA T106
Q361	1560000490	S.FET	2SK508 K52 T2B
Q362	1530002690	S.TRANSISTOR	2SC4116-GR (TE85R)
Q381	1530003090	S.TRANSISTOR	2SC4213-B (TE85R)
Q391	1530002690	S.TRANSISTOR	2SC4116-GR (TE85R)
Q461	1590000720	S.TRANSISTOR	DTA144EUA T106
Q491	1560000540	S.FET	2SK880-Y (TE85R)
Q521	1590002480	S.TRANSISTOR	UMC3N TR

S.=Surface mount

[PLL UNIT]

REF NO.	ORDER NO.	DESCRIPTION	
Q621	1530002560	S.TRANSISTOR	2SC4403-3-TL
Q661	1530002560	S.TRANSISTOR	2SC4403-3-TL
Q681	1530002560	S.TRANSISTOR	2SC4403-3-TL
Q851	1590001330	S.TRANSISTOR	DTA114EUA T106
Q931	1530002060	S.TRANSISTOR	2SC4081 T107 R
Q941	1530002560	S.TRANSISTOR	2SC4403-3-TL
D1	1720000590	S.VARICAP	MA357 (TX)
D231	1750000520	S.DIODE	DAN222TL
D261	1750000520	S.DIODE	DAN222TL
D271	1710000780	S.DIODE	MA114 (TX)
D301	1720000390	S.VARICAP	KV1470TL
D302	1790000620	S.DIODE	MA77 (TX)
D331	1720000390	S.VARICAP	KV1470TL
D332	1790000620	S.DIODE	MA77 (TX)
D361	1790001400	S.VARICAP	MA304B (TX)
D362	1790000620	S.DIODE	MA77 (TX)
D511	1790000620	S.DIODE	MA77 (TX)
D531	1750000620	S.DIODE	MA717WK (TX)
D601	1720000590	S.VARICAP	MA357 (TX)
D701	1790000450	S.DIODE	MA862 (TX)
D731	1790000450	S.DIODE	MA862 (TX)
D732	1790000450	S.DIODE	MA862 (TX)
D761	1750000210	S.DIODE	1SV237 (TE85R)
D762	1750000210	S.DIODE	1SV237 (TE85R)
D821	1790001620	S.DIODE	1SV308 (TPL3)
D822	1790001620	S.DIODE	1SV308 (TPL3)
D825	1790001620	S.DIODE	1SV308 (TPL3)
D851	1790001620	S.DIODE	1SV308 (TPL3)
D861	1750000210	S.DIODE	1SV237 (TE85R)
D862	1160000060	S.DIODE	DAN202U T107
D863	1790001250	S.DIODE	MA2S111-(TX)
D864	1790001250	S.DIODE	MA2S111-(TX)
D931	1790001250	S.DIODE	MA2S111-(TX)
FI71	2020001600	S.CERAMIC	SFECV10.5MA-5
X621	6050005711	XTAL	CR-275A (30.00000 MHz)
L1	6130002970	COIL	LB-343
L11	6200005010	S.COIL	NL 252018T-100J
L30	6200002040	S.COIL	NL 252018T-101J
L41	6200003590	S.COIL	EXCCL3225U1
L42	6200003590	S.COIL	EXCCL3225U1
L43	6200003590	S.COIL	EXCCL3225U1
L44	6200003590	S.COIL	EXCCL3225U1
L45	6200001830	S.COIL	NL 322522T-100J
L48	6200001830	S.COIL	NL 322522T-100J
L71	6200002860	S.COIL	NL 252018T-4R7J
L131	6200001830	S.COIL	NL 322522T-100J
L161	6200002040	S.COIL	NL 252018T-101J
L163	6200003540	S.COIL	MLF1608D R22K-T
L231	6140002220	COIL	LR-270 (TR6X3X2 3A9)
L301	6170000230	COIL	LW-25
L302	6190001280	COIL	E544GN-110248
L303	6170000230	COIL	LW-25
L331	6170000230	COIL	LW-25
L332	6190001370	COIL	E544GN-110254
L333	6170000230	COIL	LW-25
L363	6180000810	COIL	LAL 03NA 2R2M
L364	6180000810	COIL	LAL 03NA 2R2M
L366	6190001390	COIL	C-13975-4.5
L367	6200005010	S.COIL	NL 252018T-100J
L382	6200003260	S.COIL	NL 322522T-101J
L383	6180000810	COIL	LAL 03NA 2R2M
L391	6200005010	S.COIL	NL 252018T-100J
L411	6140002220	COIL	LR-270 (TR6X3X2 3A9)
L461	6200005010	S.COIL	NL 252018T-100J
L501	6200001980	S.COIL	NL 252018T-1R0J
L531	6140002810	S.COIL	LR-317
L532	6200003540	S.COIL	MLF1608D R22K-T
L542	6200002920	S.COIL	ELJNC R33K-F
L600	6200002040	S.COIL	NL 252018T-101J
L601	6130001100	COIL	LB-146
L621	6200003260	S.COIL	NL 322522T-101J
L622	6200003590	S.COIL	EXCCL3225U1
L623	6150004520	S.COIL	LS-508
L641	6200002000	S.COIL	NL 252018T-3R3J

[PLL UNIT]

REF NO.	ORDER NO.	DESCRIPTION	
L642	6200004670	S.COIL	NL 252018T-3R9J
L681	6150004830	S.COIL	LS-509
L682	6150004830	S.COIL	LS-509
L711	6200002160	S.COIL	ELJNC 82NK-F
L712	6200001630	S.COIL	ELJNC R10K-F
L713	6200002160	S.COIL	ELJNC 82NK-F
L741	6200002150	S.COIL	ELJNC 56NK-F
L742	6200003670	S.COIL	ELJNC 68NK-F
L743	6200003670	S.COIL	ELJNC 68NK-F
L771	6200002160	S.COIL	ELJNC 82NK-F
L781	6200001770	S.COIL	ELJNC 47NK-F
L782	6200002120	S.COIL	ELJNC 33NK-F
L801	6200005740	S.COIL	ELJRE 47NG-F
L802	6200005720	S.COIL	ELJRE 33NG-F
L811	6200005710	S.COIL	ELJRE 27NG-F
L812	6200005720	S.COIL	ELJRE 33NG-F
L821	6200007740	S.COIL	LQN21A 47NJ04
L822	6200007720	S.COIL	LQN21A 33NJ04
L823	6200007730	S.COIL	LQN21A 39NJ04
L824	6200007710	S.COIL	LQN21A 27NJ04
L861	6200005700	S.COIL	ELJRE 22NG-F
L862	6200005680	S.COIL	ELJRE 15NG-F
L871	6200005680	S.COIL	ELJRE 15NG-F
L872	6200005670	S.COIL	ELJRE 12NG-F
L881	6200002180	S.COIL	NL 252018T-R12J
L882	6200005660	S.COIL	ELJRE 10NG-F
L901	6200005010	S.COIL	NL 252018T-100J
L941	6200003540	S.COIL	MLF1608D R22K-T
L981	6200003170	S.COIL	NL 322522T-330J
L991	6200007390	S.COIL	ELJFC 120K-F 12U
L992	6200006380	S.COIL	ELJFC 150K 15U
L1000	6200006980	S.COIL	ELJRE R10G-F
L1001	2040000490	COIL	EXC-ELDR25C
L1016	6200005010	S.COIL	NL 252018T-100J
R11	7030003280	S.RESISTOR	ERJ3GEYJ 470 V (47 Ω)
R12	7030003320	S.RESISTOR	ERJ3GEYJ 101 V (100 Ω)
R13	7030003680	S.RESISTOR	ERJ3GEYJ 104 V (100 kΩ)
R14	7030003680	S.RESISTOR	ERJ3GEYJ 104 V (100 kΩ)
R15	7030003340	S.RESISTOR	ERJ3GEYJ 151 V (150 Ω)
R16	7030003520	S.RESISTOR	ERJ3GEYJ 472 V (4.7 kΩ)
R21	7030003640	S.RESISTOR	ERJ3GEYJ 473 V (47 kΩ)
R23	7030003320	S.RESISTOR	ERJ3GEYJ 101 V (100 Ω)
R24	7030003370	S.RESISTOR	ERJ3GEYJ 271 V (270 Ω)
R32	7030003430	S.RESISTOR	ERJ3GEYJ 821 V (820 Ω)
R34	7030004050	S.RESISTOR	ERJ3GEYJ 1R0 V (1 Ω)
R41	7030003220	S.RESISTOR	ERJ3GEYJ 150 V (15 Ω)
R42	7030003300	S.RESISTOR	ERJ3GEYJ 680 V (68 Ω)
R43	7030003220	S.RESISTOR	ERJ3GEYJ 150 V (15 Ω)
R52	7030003280	S.RESISTOR	ERJ3GEYJ 470 V (47 Ω)
R53	7030003370	S.RESISTOR	ERJ3GEYJ 271 V (270 Ω)
R54	7030003660	S.RESISTOR	ERJ3GEYJ 683 V (68 kΩ)
R71	7030003280	S.RESISTOR	ERJ3GEYJ 470 V (47 Ω)
R72	7030003370	S.RESISTOR	ERJ3GEYJ 271 V (270 Ω)
R73	7030003660	S.RESISTOR	ERJ3GEYJ 683 V (68 kΩ)
R75	7030003400	S.RESISTOR	ERJ3GEYJ 471 V (470 Ω)
R76	7030003360	S.RESISTOR	ERJ3GEYJ 221 V (220 Ω)
R101	7030003440	S.RESISTOR	ERJ3GEYJ 102 V (1 kΩ)
R102	7030003440	S.RESISTOR	ERJ3GEYJ 102 V (1 kΩ)
R103	7030003440	S.RESISTOR	ERJ3GEYJ 102 V (1 kΩ)
R104	7030003440	S.RESISTOR	ERJ3GEYJ 102 V (1 kΩ)
R105	7030003440	S.RESISTOR	ERJ3GEYJ 102 V (1 kΩ)
R106	7030003440	S.RESISTOR	ERJ3GEYJ 102 V (1 kΩ)
R131	7030003570	S.RESISTOR	ERJ3GEYJ 123 V (12 kΩ)
R132	7030003840	S.RESISTOR	ERJ3GEYJ 225 V (2.2 MΩ)
R133	7030009690	S.RESISTOR	RR0816P-101-D (100 Ω)
R134	7030005630	S.RESISTOR	RR0816R-154-D (150 kΩ)
R135	7030005390	S.RESISTOR	RR0816P-102-D (1 kΩ)
R141	7030003440	S.RESISTOR	ERJ3GEYJ 102 V (1 kΩ)
R142	7030003440	S.RESISTOR	ERJ3GEYJ 102 V (1 kΩ)
R143	7030003440	S.RESISTOR	ERJ3GEYJ 102 V (1 kΩ)
R144	7030003440	S.RESISTOR	ERJ3GEYJ 102 V (1 kΩ)
R145	7030003440	S.RESISTOR	ERJ3GEYJ 102 V (1 kΩ)
R151	7030003560	S.RESISTOR	ERJ3GEYJ 103 V (10 kΩ)
R152	7030003560	S.RESISTOR	ERJ3GEYJ 103 V (10 kΩ)
R153	7030003560	S.RESISTOR	ERJ3GEYJ 103 V (10 kΩ)
R154	7030003560	S.RESISTOR	ERJ3GEYJ 103 V (10 kΩ)
R155	7030003560	S.RESISTOR	ERJ3GEYJ 103 V (10 kΩ)
R161	7030003380	S.RESISTOR	ERJ3GEYJ 331 V (330 Ω)
R162	7030003590	S.RESISTOR	ERJ3GEYJ 183 V (18 kΩ)
R164	7030003300	S.RESISTOR	ERJ3GEYJ 680 V (68 Ω)

S.=Surface mount

[PLL UNIT]

REF NO.	ORDER NO.	DESCRIPTION	
R170	7030005370	S.RESISTOR	RR0816P-202-B (2 kΩ)
R171	7030005380	S.RESISTOR	RR0816P-102-B (1 kΩ)
R172	7030005370	S.RESISTOR	RR0816P-202-B (2 kΩ)
R173	7030005380	S.RESISTOR	RR0816P-102-B (1 kΩ)
R174	7030005370	S.RESISTOR	RR0816P-202-B (2 kΩ)
R175	7030005380	S.RESISTOR	RR0816P-102-B (1 kΩ)
R176	7030005370	S.RESISTOR	RR0816P-202-B (2 kΩ)
R177	7030005380	S.RESISTOR	RR0816P-102-B (1 kΩ)
R178	7030005370	S.RESISTOR	RR0816P-202-B (2 kΩ)
R179	7030005380	S.RESISTOR	RR0816P-102-B (1 kΩ)
R180	7030005400	S.RESISTOR	RR0816P-202-D (2 kΩ)
R181	7030005390	S.RESISTOR	RR0816P-102-D (1 kΩ)
R182	7030005400	S.RESISTOR	RR0816P-202-D (2 kΩ)
R183	7030005390	S.RESISTOR	RR0816P-102-D (1 kΩ)
R184	7030005400	S.RESISTOR	RR0816P-202-D (2 kΩ)
R185	7030005390	S.RESISTOR	RR0816P-102-D (1 kΩ)
R186	7030005400	S.RESISTOR	RR0816P-202-D (2 kΩ)
R187	7030005390	S.RESISTOR	RR0816P-102-D (1 kΩ)
R188	7030005400	S.RESISTOR	RR0816P-202-D (2 kΩ)
R189	7030005390	S.RESISTOR	RR0816P-102-D (1 kΩ)
R190	7030005400	S.RESISTOR	RR0816P-202-D (2 kΩ)
R191	7030005390	S.RESISTOR	RR0816P-102-D (1 kΩ)
R192	7030005400	S.RESISTOR	RR0816P-202-D (2 kΩ)
R193	7030005400	S.RESISTOR	RR0816P-202-D (2 kΩ)
R201	7030003640	S.RESISTOR	ERJ3GEYJ 473 V (47 kΩ)
R202	7030003560	S.RESISTOR	ERJ3GEYJ 103 V (10 kΩ)
R203	7030003560	S.RESISTOR	ERJ3GEYJ 103 V (10 kΩ)
R204	7030003720	S.RESISTOR	ERJ3GEYJ 224 V (220 kΩ)
R205	7030003440	S.RESISTOR	ERJ3GEYJ 102 V (1 kΩ)
R206	7030003440	S.RESISTOR	ERJ3GEYJ 102 V (1 kΩ)
R207	7030003560	S.RESISTOR	ERJ3GEYJ 103 V (10 kΩ)
R208	7030003480	S.RESISTOR	ERJ3GEYJ 222 V (2.2 kΩ)
R209	7030003480	S.RESISTOR	ERJ3GEYJ 222 V (2.2 kΩ)
R231	7510001100	S.THERMISTOR	NTCCM1608 4LH 104KC
R232	7030003560	S.RESISTOR	ERJ3GEYJ 103 V (10 kΩ)
R233	7030003440	S.RESISTOR	ERJ3GEYJ 102 V (1 kΩ)
R234	7030003400	S.RESISTOR	ERJ3GEYJ 471 V (470 Ω)
R235	7030000100	S.RESISTOR	MCR10EZHJ 4.7 Ω (4R7)
R236	7030003550	S.RESISTOR	ERJ3GEYJ 822 V (8.2 kΩ)
R237	7030000321	S.RESISTOR	ERX1SJ3R3 (3.3 Ω)
R251	7030003440	S.RESISTOR	ERJ3GEYJ 102 V (1 kΩ)
R252	7030003440	S.RESISTOR	ERJ3GEYJ 102 V (1 kΩ)
R253	7030003440	S.RESISTOR	ERJ3GEYJ 102 V (1 kΩ)
R254	7030003440	S.RESISTOR	ERJ3GEYJ 102 V (1 kΩ)
R255	7030003440	S.RESISTOR	ERJ3GEYJ 102 V (1 kΩ)
R256	7030003440	S.RESISTOR	ERJ3GEYJ 102 V (1 kΩ)
R257	7030003440	S.RESISTOR	ERJ3GEYJ 102 V (1 kΩ)
R258	7030003440	S.RESISTOR	ERJ3GEYJ 102 V (1 kΩ)
R259	7030003440	S.RESISTOR	ERJ3GEYJ 102 V (1 kΩ)
R260	7030003440	S.RESISTOR	ERJ3GEYJ 102 V (1 kΩ)
R261	7030003640	S.RESISTOR	ERJ3GEYJ 473 V (47 kΩ)
R263	7030003440	S.RESISTOR	ERJ3GEYJ 102 V (1 kΩ)
R264	7030003440	S.RESISTOR	ERJ3GEYJ 102 V (1 kΩ)
R265	7030003610	S.RESISTOR	ERJ3GEYJ 273 V (27 kΩ)
R283	7510000910	S.THERMISTOR	NTCCF2012 4AH 473KC-T
R284	7030003420	S.RESISTOR	ERJ3GEYJ 681 V (680 Ω)
R285	7030003440	S.RESISTOR	ERJ3GEYJ 102 V (1 kΩ)
R291	7030006080	S.RESISTOR	ERJ1WYJ220H (22 Ω)
R292	7030006080	S.RESISTOR	ERJ1WYJ220H (22 Ω)
R302	7030003320	S.RESISTOR	ERJ3GEYJ 101 V (100 Ω)
R321	7030003380	S.RESISTOR	ERJ3GEYJ 331 V (330 Ω)
R322	7030003560	S.RESISTOR	ERJ3GEYJ 103 V (10 kΩ)
R323	7030003520	S.RESISTOR	ERJ3GEYJ 472 V (4.7 kΩ)
R324	7030003440	S.RESISTOR	ERJ3GEYJ 102 V (1 kΩ)
R325	7030003560	S.RESISTOR	ERJ3GEYJ 103 V (10 kΩ)
R332	7030003320	S.RESISTOR	ERJ3GEYJ 101 V (100 Ω)
R351	7030003340	S.RESISTOR	ERJ3GEYJ 151 V (150 Ω)
R352	7030003560	S.RESISTOR	ERJ3GEYJ 103 V (10 kΩ)
R353	7030003520	S.RESISTOR	ERJ3GEYJ 472 V (4.7 kΩ)
R354	7030003440	S.RESISTOR	ERJ3GEYJ 102 V (1 kΩ)
R355	7030003560	S.RESISTOR	ERJ3GEYJ 103 V (10 kΩ)
R356	7030003300	S.RESISTOR	ERJ3GEYJ 680 V (68 Ω)
R361	7030003300	S.RESISTOR	ERJ3GEYJ 680 V (68 Ω)
R364	7030003560	S.RESISTOR	ERJ3GEYJ 103 V (10 kΩ)
R365	7030003560	S.RESISTOR	ERJ3GEYJ 103 V (10 kΩ)
R381	7030003380	S.RESISTOR	ERJ3GEYJ 331 V (330 Ω)
R382	7030003560	S.RESISTOR	ERJ3GEYJ 103 V (10 kΩ)
R383	7030003520	S.RESISTOR	ERJ3GEYJ 472 V (4.7 kΩ)
R384	7030003560	S.RESISTOR	ERJ3GEYJ 103 V (10 kΩ)
R385	7030003560	S.RESISTOR	ERJ3GEYJ 103 V (10 kΩ)
R391	7030003560	S.RESISTOR	ERJ3GEYJ 103 V (10 kΩ)
R392	7030003560	S.RESISTOR	ERJ3GEYJ 103 V (10 kΩ)

[PLL UNIT]

REF NO.	ORDER NO.	DESCRIPTION	
R411	7030009690	S.RESISTOR	RR0816P-101-D (100 Ω)
R412	7030006580	S.RESISTOR	RR0816P-122-D (1.2 kΩ)
R461	7030003680	S.RESISTOR	ERJ3GEYJ 104 V (100 kΩ)
R462	7030003440	S.RESISTOR	ERJ3GEYJ 102 V (1 kΩ)
R463	7030003440	S.RESISTOR	ERJ3GEYJ 102 V (1 kΩ)
R464	7030003440	S.RESISTOR	ERJ3GEYJ 102 V (1 kΩ)
R465	7030003680	S.RESISTOR	ERJ3GEYJ 104 V (100 kΩ)
R491	7030003320	S.RESISTOR	ERJ3GEYJ 101 V (100 Ω)
R492	7030003680	S.RESISTOR	ERJ3GEYJ 104 V (100 kΩ)
R493	7030003680	S.RESISTOR	ERJ3GEYJ 104 V (100 kΩ)
R494	7030003800	S.RESISTOR	ERJ3GEYJ 105 V (1 MΩ)
R501	7030003260	S.RESISTOR	ERJ3GEYJ 330 V (33 Ω)
R502	7030003520	S.RESISTOR	ERJ3GEYJ 472 V (4.7 kΩ)
R511	7030003550	S.RESISTOR	ERJ3GEYJ 822 V (8.2 kΩ)
R512	7030003510	S.RESISTOR	ERJ3GEYJ 392 V (3.9 kΩ)
R513	7030003320	S.RESISTOR	ERJ3GEYJ 101 V (100 Ω)
R515	7030003400	S.RESISTOR	ERJ3GEYJ 471 V (470 Ω)
R516	7030003370	S.RESISTOR	ERJ3GEYJ 271 V (270 Ω)
R517	7030003230	S.RESISTOR	ERJ3GEYJ 180 V (18 Ω)
R518	7030003370	S.RESISTOR	ERJ3GEYJ 271 V (270 Ω)
R523	7030003440	S.RESISTOR	ERJ3GEYJ 102 V (1 kΩ)
R524	7030003200	S.RESISTOR	ERJ3GEYJ 100 V (10 Ω)
R531	7030003340	S.RESISTOR	ERJ3GEYJ 151 V (150 Ω)
R532	7030003270	S.RESISTOR	ERJ3GEYJ 390 V (39 Ω)
R533	7030003340	S.RESISTOR	ERJ3GEYJ 151 V (150 Ω)
R537	7030003370	S.RESISTOR	ERJ3GEYJ 271 V (270 Ω)
R538	7030003230	S.RESISTOR	ERJ3GEYJ 180 V (18 Ω)
R539	7030003370	S.RESISTOR	ERJ3GEYJ 271 V (270 Ω)
R541	7030003340	S.RESISTOR	ERJ3GEYJ 151 V (150 Ω)
R542	7030003270	S.RESISTOR	ERJ3GEYJ 390 V (39 Ω)
R601	7030003440	S.RESISTOR	ERJ3GEYJ 102 V (1 kΩ)
R602	7310002740	S.TRIMMER	RV-150 (RH03A3A14X0FC) 103
R603	7030003440	S.RESISTOR	ERJ3GEYJ 102 V (1 kΩ)
R604	7030003440	S.RESISTOR	ERJ3GEYJ 102 V (1 kΩ)
R605	7030003640	S.RESISTOR	ERJ3GEYJ 473 V (47 kΩ)
R606	7030003200	S.RESISTOR	ERJ3GEYJ 100 V (10 Ω)
R621	7030003580	S.RESISTOR	ERJ3GEYJ 153 V (15 kΩ)
R622	7030003520	S.RESISTOR	ERJ3GEYJ 472 V (4.7 kΩ)
R623	7030003400	S.RESISTOR	ERJ3GEYJ 471 V (470 Ω)
R641	7030003360	S.RESISTOR	ERJ3GEYJ 221 V (220 Ω)
R661	7030003320	S.RESISTOR	ERJ3GEYJ 101 V (100 Ω)
R662	7030003470	S.RESISTOR	ERJ3GEYJ 182 V (1.8 kΩ)
R663	7030003480	S.RESISTOR	ERJ3GEYJ 222 V (2.2 kΩ)
R664	7030003350	S.RESISTOR	ERJ3GEYJ 181 V (180 Ω)
R665	7030003300	S.RESISTOR	ERJ3GEYJ 680 V (68 Ω)
R666	7030003340	S.RESISTOR	ERJ3GEYJ 151 V (150 Ω)
R681	7030003320	S.RESISTOR	ERJ3GEYJ 101 V (100 Ω)
R682	7030003600	S.RESISTOR	ERJ3GEYJ 223 V (22 kΩ)
R683	7030003560	S.RESISTOR	ERJ3GEYJ 103 V (10 kΩ)
R684	7030003360	S.RESISTOR	ERJ3GEYJ 221 V (220 Ω)
R701	7030003440	S.RESISTOR	ERJ3GEYJ 102 V (1 kΩ)
R731	7030003440	S.RESISTOR	ERJ3GEYJ 102 V (1 kΩ)
R761	7030003440	S.RESISTOR	ERJ3GEYJ 102 V (1 kΩ)
R762	7030003320	S.RESISTOR	ERJ3GEYJ 101 V (100 Ω)
R791	7030003440	S.RESISTOR	ERJ3GEYJ 102 V (1 kΩ)
R792	7030003440	S.RESISTOR	ERJ3GEYJ 102 V (1 kΩ)
R821	7030003340	S.RESISTOR	ERJ3GEYJ 151 V (150 Ω)
R822	7030003440	S.RESISTOR	ERJ3GEYJ 102 V (1 kΩ)
R823	7030003440	S.RESISTOR	ERJ3GEYJ 102 V (1 kΩ)
R824	7030003440	S.RESISTOR	ERJ3GEYJ 102 V (1 kΩ)
R825	7030003560	S.RESISTOR	ERJ3GEYJ 103 V (10 kΩ)
R851	7030003440	S.RESISTOR	ERJ3GEYJ 102 V (1 kΩ)
R852	7030003440	S.RESISTOR	ERJ3GEYJ 102 V (1 kΩ)
R853	7030003440	S.RESISTOR	ERJ3GEYJ 102 V (1 kΩ)
R891	7030003340	S.RESISTOR	ERJ3GEYJ 151 V (150 Ω)
R892	7030003270	S.RESISTOR	ERJ3GEYJ 390 V (39 Ω)
R893	7030003340	S.RESISTOR	ERJ3GEYJ 151 V (150 Ω)
R901	7030003440	S.RESISTOR	ERJ3GEYJ 102 V (1 kΩ)
R902	7030003440	S.RESISTOR	ERJ3GEYJ 102 V (1 kΩ)
R903	7030003440	S.RESISTOR	ERJ3GEYJ 102 V (1 kΩ)
R931	7030003520	S.RESISTOR	ERJ3GEYJ 472 V (4.7 kΩ)
R932	7030003620	S.RESISTOR	ERJ3GEYJ 333 V (33 kΩ)
R933	7030003580	S.RESISTOR	ERJ3GEYJ 153 V (15 kΩ)
R934	7030003480	S.RESISTOR	ERJ3GEYJ 222 V (2.2 kΩ)
R942	7030003590	S.RESISTOR	ERJ3GEYJ 183 V (18 kΩ)
R943	7030003380	S.RESISTOR	ERJ3GEYJ 331 V (330 Ω)
R944	7030003300	S.RESISTOR	ERJ3GEYJ 680 V (68 Ω)
R951	7030005370	S.RESISTOR	RR0816P-202-B (2 kΩ)
R952	7030005380	S.RESISTOR	RR0816P-102-B (1 kΩ)
R953	7030005370	S.RESISTOR	RR0816P-202-B (2 kΩ)
R954	7030005380	S.RESISTOR	RR0816P-102-B (1 kΩ)
R955	7030005370	S.RESISTOR	RR0816P-202-B (2 kΩ)

S.=Surface mount

[PLL UNIT]

REF NO.	ORDER NO.	DESCRIPTION	
R956	7030005380	S.RESISTOR	RR0816P-102-B (1 kΩ)
R957	7030005400	S.RESISTOR	RR0816P-202-D (2 kΩ)
R958	7030005390	S.RESISTOR	RR0816P-102-D (1 kΩ)
R959	7030005400	S.RESISTOR	RR0816P-202-D (2 kΩ)
R960	7030005390	S.RESISTOR	RR0816P-102-D (1 kΩ)
R961	7030005400	S.RESISTOR	RR0816P-202-D (2 kΩ)
R962	7030005390	S.RESISTOR	RR0816P-102-D (1 kΩ)
R963	7030005400	S.RESISTOR	RR0816P-202-D (2 kΩ)
R964	7030005390	S.RESISTOR	RR0816P-102-D (1 kΩ)
R965	7030005400	S.RESISTOR	RR0816P-202-D (2 kΩ)
R966	7030005390	S.RESISTOR	RR0816P-102-D (1 kΩ)
R967	7030005400	S.RESISTOR	RR0816P-202-D (2 kΩ)
R968	7030005390	S.RESISTOR	RR0816P-102-D (1 kΩ)
R969	7030005400	S.RESISTOR	RR0816P-202-D (2 kΩ)
R970	7030005400	S.RESISTOR	RR0816P-202-D (2 kΩ)
R1011	7030003400	S.RESISTOR	ERJ3GEYJ 471 V (470 Ω)
R1012	7030003400	S.RESISTOR	ERJ3GEYJ 471 V (470 Ω)
R1013	7030003400	S.RESISTOR	ERJ3GEYJ 471 V (470 Ω)
R1014	7030003400	S.RESISTOR	ERJ3GEYJ 471 V (470 Ω)
R1015	7030003400	S.RESISTOR	ERJ3GEYJ 471 V (470 Ω)
R1017	7030003400	S.RESISTOR	ERJ3GEYJ 471 V (470 Ω)
C1	4040000190	BARRIERLAYR	UAT 05X 103K
C2	4030008560	S.CERAMIC	C1608 CH 1H 300J-T-A
C3	4030006950	S.CERAMIC	C1608 CH 1H 040C-T-A
C4	4610001850	S.TRIMMER	TZBX4R200BA110T00 20P
C5	4030016550	S.CERAMIC	CM105 CH 151G 50AT
C11	4510005600	S.ELECTROLYTIC	ECEV1CS100SR
C12	4030006880	S.CERAMIC	C1608 JB 1H 472K-T-A
C13	4030006880	S.CERAMIC	C1608 JB 1H 472K-T-A
C14	4030016550	S.CERAMIC	CM105 CH 151G 50AT
C15	4030016550	S.CERAMIC	CM105 CH 151G 50AT
C21	4030009530	S.CERAMIC	C1608 CH 1H 030B-T-A
C22	4030011600	S.CERAMIC	C1608 JB 1C 104KT-N
C31	4030006880	S.CERAMIC	C1608 JB 1H 472K-T-A
C41	4030006880	S.CERAMIC	C1608 JB 1H 472K-T-A
C44	4030006880	S.CERAMIC	C1608 JB 1H 472K-T-A
C45	4030008680	S.CERAMIC	C2012 JF 1C 105Z-T-A
C51	4030006880	S.CERAMIC	C1608 JB 1H 472K-T-A
C52	4030006880	S.CERAMIC	C1608 JB 1H 472K-T-A
C71	4030006880	S.CERAMIC	C1608 JB 1H 472K-T-A
C72	4030011600	S.CERAMIC	C1608 JB 1C 104KT-N
C73	4030007050	S.CERAMIC	C1608 CH 1H 220J-T-A
C75	4030006880	S.CERAMIC	C1608 JB 1H 472K-T-A
C76	4030007090	S.CERAMIC	C1608 CH 1H 470J-T-A
C77	4030007090	S.CERAMIC	C1608 CH 1H 470J-T-A
C101	4030011600	S.CERAMIC	C1608 JB 1C 104KT-N
C102	4030011600	S.CERAMIC	C1608 JB 1C 104KT-N
C103	4030011600	S.CERAMIC	C1608 JB 1C 104KT-N
C104	4030011600	S.CERAMIC	C1608 JB 1C 104KT-N
C105	4030011600	S.CERAMIC	C1608 JB 1C 104KT-N
C106	4030011600	S.CERAMIC	C1608 JB 1C 104KT-N
C107	4030011600	S.CERAMIC	C1608 JB 1C 104KT-N
C108	4030011600	S.CERAMIC	C1608 JB 1C 104KT-N
C109	4030011600	S.CERAMIC	C1608 JB 1C 104KT-N
C110	4030011600	S.CERAMIC	C1608 JB 1C 104KT-N
C111	4030011600	S.CERAMIC	C1608 JB 1C 104KT-N
C112	4030011600	S.CERAMIC	C1608 JB 1C 104KT-N
C113	4030011600	S.CERAMIC	C1608 JB 1C 104KT-N
C114	4030011600	S.CERAMIC	C1608 JB 1C 104KT-N
C131	4030006880	S.CERAMIC	C1608 JB 1H 472K-T-A
C132	4030011600	S.CERAMIC	C1608 JB 1C 104KT-N
C133	4550003220	S.TANTALUM	TEMSVA 1E 105M-8L
C145	4030006880	S.CERAMIC	C1608 JB 1H 472K-T-A
C146	4030006880	S.CERAMIC	C1608 JB 1H 472K-T-A
C147	4030006880	S.CERAMIC	C1608 JB 1H 472K-T-A
C148	4030006880	S.CERAMIC	C1608 JB 1H 472K-T-A
C149	4030006880	S.CERAMIC	C1608 JB 1H 472K-T-A
C150	4030006880	S.CERAMIC	C1608 JB 1H 472K-T-A
C151	4030006880	S.CERAMIC	C1608 JB 1H 472K-T-A
C152	4030006880	S.CERAMIC	C1608 JB 1H 472K-T-A
C153	4030006880	S.CERAMIC	C1608 JB 1H 472K-T-A
C154	4030006880	S.CERAMIC	C1608 JB 1H 472K-T-A
C155	4030006880	S.CERAMIC	C1608 JB 1H 472K-T-A
C161	4030006880	S.CERAMIC	C1608 JB 1H 472K-T-A
C163	4030006880	S.CERAMIC	C1608 JB 1H 472K-T-A
C165	4030007130	S.CERAMIC	C1608 CH 1H 101J-T-A
C166	4030007130	S.CERAMIC	C1608 CH 1H 101J-T-A
C200	4030011340	S.CERAMIC	C1608 CH 1H 471J-T-A
C201	4550006080	S.TANTALUM	TEMSVB2 1C 106M-8L
C202	4030009110	S.CERAMIC	C3216 JB 1C 474K-T-A

[PLL UNIT]

REF NO.	ORDER NO.	DESCRIPTION	
C203	4030011600	S.CERAMIC	C1608 JB 1C 104KT-N
C204	4030007170	S.CERAMIC	C1608 CH 1H 221J-T-A
C205	4030009110	S.CERAMIC	C3216 JB 1C 474K-T-A
C206	4550006080	S.TANTALUM	TEMSVB2 1C 106M-8L
C207	4030009110	S.CERAMIC	C3216 JB 1C 474K-T-A
C208	4030010210	S.CERAMIC	C3216 JB 1C 105M-T-A
C209	4550006080	S.TANTALUM	TEMSVB2 1C 106M-8L
C210	4030006860	S.CERAMIC	C1608 JB 1H 102K-T-A
C212	4030006880	S.CERAMIC	C1608 JB 1H 472K-T-A
C215	4030007090	S.CERAMIC	C1608 CH 1H 470J-T-A
C218	4030006880	S.CERAMIC	C1608 JB 1H 472K-T-A
C220	4030007090	S.CERAMIC	C1608 CH 1H 470J-T-A
C221	4030006880	S.CERAMIC	C1608 JB 1H 472K-T-A
C222	4030007090	S.CERAMIC	C1608 CH 1H 470J-T-A
C223	4030007090	S.CERAMIC	C1608 CH 1H 470J-T-A
C224	4030007090	S.CERAMIC	C1608 CH 1H 470J-T-A
C225	4030007090	S.CERAMIC	C1608 CH 1H 470J-T-A
C231	4510004590	ELECTROLYTIC	16 MV 470 HC
C232	4030009110	S.CERAMIC	C3216 JB 1C 474K-T-A
C233	4030006880	S.CERAMIC	C1608 JB 1H 472K-T-A
C234	4030011600	S.CERAMIC	C1608 JB 1C 104KT-N
C235	4510004590	ELECTROLYTIC	16 MV 470 HC
C236	4510004590	ELECTROLYTIC	16 MV 470 HC
C237	4030011600	S.CERAMIC	C1608 JB 1C 104KT-N
C238	4030006880	S.CERAMIC	C1608 JB 1H 472K-T-A
C239	4030011600	S.CERAMIC	C1608 JB 1C 104KT-N
C240	4030011600	S.CERAMIC	C1608 JB 1C 104KT-N
C241	4030011600	S.CERAMIC	C1608 JB 1C 104KT-N
C251	4030006860	S.CERAMIC	C1608 JB 1H 102K-T-A
C256	4030011600	S.CERAMIC	C1608 JB 1C 104KT-N
C262	4030006860	S.CERAMIC	C1608 JB 1H 102K-T-A
C265	4030006860	S.CERAMIC	C1608 JB 1H 102K-T-A
C271	4510005600	S.ELECTROLYTIC	ECEV1CS100SR
C272	4030006880	S.CERAMIC	C1608 JB 1H 472K-T-A
C273	4030006880	S.CERAMIC	C1608 JB 1H 472K-T-A
C274	4510005600	S.ELECTROLYTIC	ECEV1CS100SR
C281	4030006880	S.CERAMIC	C1608 JB 1H 472K-T-A
C284	4510005600	S.ELECTROLYTIC	ECEV1CS100SR
C285	4030006880	S.CERAMIC	C1608 JB 1H 472K-T-A
C286	4030011600	S.CERAMIC	C1608 JB 1C 104KT-N
C291	4510005600	S.ELECTROLYTIC	ECEV1CS100SR
C292	4030006880	S.CERAMIC	C1608 JB 1H 472K-T-A
C293	4030006880	S.CERAMIC	C1608 JB 1H 472K-T-A
C294	4510005600	S.ELECTROLYTIC	ECEV1CS100SR
C295	4510001350	ELECTROLYTIC	16 MS5 10UF
C301	4030011340	S.CERAMIC	C1608 CH 1H 471J-T-A
C302	4030006850	S.CERAMIC	C1608 JB 1H 471K-T-A
C303	4030006880	S.CERAMIC	C1608 JB 1H 472K-T-A
C304	4030009510	S.CERAMIC	C1608 CH 1H 010B-T-A
C305	4030006850	S.CERAMIC	C1608 JB 1H 471K-T-A
C306	4610001830	S.TRIMMER	TZBX4N100BA110T00 10P
C307	4030009540	S.CERAMIC	C1608 CH 1H 1R5B-T-A
C308	4030007150	S.CERAMIC	C1608 CH 1H 151J-T-A
C321	4030006880	S.CERAMIC	C1608 JB 1H 472K-T-A
C322	4030006880	S.CERAMIC	C1608 JB 1H 472K-T-A
C323	4030006880	S.CERAMIC	C1608 JB 1H 472K-T-A
C325	4030006850	S.CERAMIC	C1608 JB 1H 471K-T-A
C326	4030006880	S.CERAMIC	C1608 JB 1H 472K-T-A
C331	4030007150	S.CERAMIC	C1608 CH 1H 151J-T-A
C332	4030006850	S.CERAMIC	C1608 JB 1H 471K-T-A
C333	4030006880	S.CERAMIC	C1608 JB 1H 472K-T-A
C334	4030009510	S.CERAMIC	C1608 CH 1H 010B-T-A
C335	4610001830	S.TRIMMER	TZBX4N100BA110T00 10P
C336	4030006950	S.CERAMIC	C1608 CH 1H 040C-T-A
C351	4030006880	S.CERAMIC	C1608 JB 1H 472K-T-A
C352	4030006880	S.CERAMIC	C1608 JB 1H 472K-T-A
C353	4030006880	S.CERAMIC	C1608 JB 1H 472K-T-A
C355	4030006880	S.CERAMIC	C1608 JB 1H 472K-T-A
C356	4030006850	S.CERAMIC	C1608 JB 1H 471K-T-A
C364	4030006850	S.CERAMIC	C1608 JB 1H 471K-T-A
C366	4030006970	S.CERAMIC	C1608 CH 1H 060D-T-A
C367	4610001860	S.TRIMMER	TZBX4Z060BA110T00 6P
C368	4030009510	S.CERAMIC	C1608 CH 1H 010B-T-A
C369	4030006850	S.CERAMIC	C1608 JB 1H 471K-T-A
C370	4030009570	S.CERAMIC	C1608 CH 1H 0R3B-T-A
C372	4030006860	S.CERAMIC	C1608 JB 1H 102K-T-A
C373	4510006220	S.ELECTROLYTIC	ECEV1CA101UP
C374	4030006980	S.CERAMIC	C1608 CH 1H 070D-T-A
C375	4030006860	S.CERAMIC	C1608 JB 1H 102K-T-A
C376	4550002890	S.TANTALUM	TESVA 1A 225M1-8L
C381	4030006880	S.CERAMIC	C1608 JB 1H 472K-T-A
C382	4030006880	S.CERAMIC	C1608 JB 1H 472K-T-A

S.=Surface mount

[PLL UNIT]

REF NO.	ORDER NO.	DESCRIPTION	
C383	4030006880	S.CERAMIC	C1608 JB 1H 472K-T-A
C384	4030011340	S.CERAMIC	C1608 CH 1H 471J-T-A
C385	4030006880	S.CERAMIC	C1608 JB 1H 472K-T-A
C391	4550006350	S.TANTALUM	TEMSVB2 1A 226M-8L
C392	4030006860	S.CERAMIC	C1608 JB 1H 102K-T-A
C414	4550006250	S.TANTALUM	TEMSVA 1A 106M-8L
C444	4550000930	S.TANTALUM	TESVA 1D 684M1-8L
C461	4550005980	S.TANTALUM	TEMSVA 1A 475M-8L
C463	4030006880	S.CERAMIC	C1608 JB 1H 472K-T-A
C464	4550006080	S.TANTALUM	TEMSVB2 1C 106M-8L
C465	4030006900	S.CERAMIC	C1608 JB 1E 103K-T-A
C472	4030006880	S.CERAMIC	C1608 JB 1H 472K-T-A
C491	4030006860	S.CERAMIC	C1608 JB 1H 102K-T-A
C492	4030006860	S.CERAMIC	C1608 JB 1H 102K-T-A
C493	4030006860	S.CERAMIC	C1608 JB 1H 102K-T-A
C501	4030006880	S.CERAMIC	C1608 JB 1H 472K-T-A
C511	4030006880	S.CERAMIC	C1608 JB 1H 472K-T-A
C512	4030006880	S.CERAMIC	C1608 JB 1H 472K-T-A
C514	4030006880	S.CERAMIC	C1608 JB 1H 472K-T-A
C531	4030006880	S.CERAMIC	C1608 JB 1H 472K-T-A
C537	4030006880	S.CERAMIC	C1608 JB 1H 472K-T-A
C541	4030006880	S.CERAMIC	C1608 JB 1H 472K-T-A
C542	4030006880	S.CERAMIC	C1608 JB 1H 472K-T-A
C543	4030006880	S.CERAMIC	C1608 JB 1H 472K-T-A
C544	4030011340	S.CERAMIC	C1608 CH 1H 471J-T-A
C547	4030006880	S.CERAMIC	C1608 JB 1H 472K-T-A
C600	4030011600	S.CERAMIC	C1608 JB 1C 104KT-N
C602	4030006880	S.CERAMIC	C1608 JB 1H 472K-T-A
C603	4030006880	S.CERAMIC	C1608 JB 1H 472K-T-A
C623	4030006880	S.CERAMIC	C1608 JB 1H 472K-T-A
C624	4030007100	S.CERAMIC	C1608 CH 1H 560J-T-A
C625	4030006880	S.CERAMIC	C1608 JB 1H 472K-T-A
C626	4030007100	S.CERAMIC	C1608 CH 1H 560J-T-A
C641	4030006980	S.CERAMIC	C1608 CH 1H 070D-T-A
C642	4030006930	S.CERAMIC	C1608 CH 1H 020C-T-A
C643	4030007010	S.CERAMIC	C1608 CH 1H 100D-T-A
C644	4030009470	S.CERAMIC	C1608 CH 1H R75C-T-A
C645	4030006990	S.CERAMIC	C1608 CH 1H 080D-T-A
C662	4030006880	S.CERAMIC	C1608 JB 1H 472K-T-A
C663	4030006880	S.CERAMIC	C1608 JB 1H 472K-T-A
C664	4030007090	S.CERAMIC	C1608 CH 1H 470J-T-A
C665	4030006880	S.CERAMIC	C1608 JB 1H 472K-T-A
C681	4030006880	S.CERAMIC	C1608 JB 1H 472K-T-A
C682	4030007060	S.CERAMIC	C1608 CH 1H 270J-T-A
C683	4030006880	S.CERAMIC	C1608 JB 1H 472K-T-A
C684	4030006920	S.CERAMIC	C1608 CH 1H 010C-T-A
C685	4030007060	S.CERAMIC	C1608 CH 1H 270J-T-A
C686	4030007090	S.CERAMIC	C1608 CH 1H 470J-T-A
C701	4030006880	S.CERAMIC	C1608 JB 1H 472K-T-A
C711	4030007070	S.CERAMIC	C1608 CH 1H 330J-T-A
C712	4030007010	S.CERAMIC	C1608 CH 1H 100D-T-A
C713	4030007090	S.CERAMIC	C1608 CH 1H 470J-T-A
C714	4030006980	S.CERAMIC	C1608 CH 1H 070D-T-A
C715	4030007060	S.CERAMIC	C1608 CH 1H 270J-T-A
C731	4030006880	S.CERAMIC	C1608 JB 1H 472K-T-A
C741	4030008560	S.CERAMIC	C1608 CH 1H 300J-T-A
C742	4030007000	S.CERAMIC	C1608 CH 1H 090D-T-A
C743	4030007070	S.CERAMIC	C1608 CH 1H 330J-T-A
C744	4030006960	S.CERAMIC	C1608 CH 1H 050C-T-A
C745	4030007040	S.CERAMIC	C1608 CH 1H 180J-T-A
C761	4030006880	S.CERAMIC	C1608 JB 1H 472K-T-A
C771	4030007020	S.CERAMIC	C1608 CH 1H 120J-T-A
C772	4030007110	S.CERAMIC	C1608 CH 1H 680J-T-A
C773	4030007030	S.CERAMIC	C1608 CH 1H 150J-T-A
C781	4030007030	S.CERAMIC	C1608 CH 1H 150J-T-A
C782	4030006940	S.CERAMIC	C1608 CH 1H 030C-T-A
C783	4030007060	S.CERAMIC	C1608 CH 1H 270J-T-A
C784	4030006990	S.CERAMIC	C1608 CH 1H 080D-T-A
C785	4030007020	S.CERAMIC	C1608 CH 1H 120J-T-A
C791	4030006880	S.CERAMIC	C1608 JB 1H 472K-T-A
C801	4030007050	S.CERAMIC	C1608 CH 1H 220J-T-A
C802	4030007060	S.CERAMIC	C1608 CH 1H 270J-T-A
C803	4030007010	S.CERAMIC	C1608 CH 1H 100D-T-A
C804	4030007120	S.CERAMIC	C1608 CH 1H 820J-T-A
C805	4030007040	S.CERAMIC	C1608 CH 1H 180J-T-A
C811	4030006990	S.CERAMIC	C1608 CH 1H 080D-T-A
C812	4030006970	S.CERAMIC	C1608 CH 1H 060D-T-A
C813	4030007040	S.CERAMIC	C1608 CH 1H 180J-T-A
C814	4030006930	S.CERAMIC	C1608 CH 1H 020C-T-A
C815	4030007010	S.CERAMIC	C1608 CH 1H 100D-T-A
C821	4030007060	S.CERAMIC	C1608 CH 1H 270J-T-A
C822	4030007020	S.CERAMIC	C1608 CH 1H 120J-T-A

[PLL UNIT]

REF NO.	ORDER NO.	DESCRIPTION	
C823	4030007010	S.CERAMIC	C1608 CH 1H 100D-T-A
C824	4030006990	S.CERAMIC	C1608 CH 1H 080D-T-A
C825	4030007110	S.CERAMIC	C1608 CH 1H 680J-T-A
C826	4030006860	S.CERAMIC	C1608 JB 1H 102K-T-A
C827	4030007060	S.CERAMIC	C1608 CH 1H 270J-T-A
C828	4030009910	S.CERAMIC	C1608 CH 1H 040B-T-A
C829	4030007050	S.CERAMIC	C1608 CH 1H 220J-T-A
C830	4030006980	S.CERAMIC	C1608 CH 1H 070D-T-A
C831	4030007020	S.CERAMIC	C1608 CH 1H 120J-T-A
C851	4030006880	S.CERAMIC	C1608 JB 1H 472K-T-A
C852	4030006880	S.CERAMIC	C1608 JB 1H 472K-T-A
C853	4030011340	S.CERAMIC	C1608 CH 1H 471J-T-A
C861	4030007030	S.CERAMIC	C1608 CH 1H 150J-T-A
C862	4030007010	S.CERAMIC	C1608 CH 1H 100D-T-A
C863	4030009920	S.CERAMIC	C1608 CH 1H 050B-T-A
C864	4030006990	S.CERAMIC	C1608 CH 1H 080D-T-A
C865	4030007090	S.CERAMIC	C1608 CH 1H 470J-T-A
C871	4030007000	S.CERAMIC	C1608 CH 1H 090D-T-A
C872	4030009500	S.CERAMIC	C1608 CH 1H 0R5B-T-A
C873	4030009920	S.CERAMIC	C1608 CH 1H 050B-T-A
C874	4030009540	S.CERAMIC	C1608 CH 1H 1R5B-T-A
C875	4030009920	S.CERAMIC	C1608 CH 1H 050B-T-A
C876	4030006880	S.CERAMIC	C1608 JB 1H 472K-T-A
C881	4030007120	S.CERAMIC	C1608 CH 1H 820J-T-A
C882	4030007170	S.CERAMIC	C1608 CH 1H 221J-T-A
C883	4030007120	S.CERAMIC	C1608 CH 1H 820J-T-A
C884	4030009910	S.CERAMIC	C1608 CH 1H 040B-T-A
C885	4030009910	S.CERAMIC	C1608 CH 1H 040B-T-A
C886	4030009910	S.CERAMIC	C1608 CH 1H 040B-T-A
C902	4030011600	S.CERAMIC	C1608 JB 1C 104KT-N
C903	4030011600	S.CERAMIC	C1608 JB 1C 104KT-N
C904	4030011600	S.CERAMIC	C1608 JB 1C 104KT-N
C905	4030011600	S.CERAMIC	C1608 JB 1C 104KT-N
C906	4030011600	S.CERAMIC	C1608 JB 1C 104KT-N
C907	4030011600	S.CERAMIC	C1608 JB 1C 104KT-N
C931	4030011600	S.CERAMIC	C1608 JB 1C 104KT-N
C934	4030006880	S.CERAMIC	C1608 JB 1H 472K-T-A
C935	4030006880	S.CERAMIC	C1608 JB 1H 472K-T-A
C941	4030006880	S.CERAMIC	C1608 JB 1H 472K-T-A
C942	4030011600	S.CERAMIC	C1608 JB 1C 104KT-N
C944	4030007130	S.CERAMIC	C1608 CH 1H 101J-T-A
C945	4030007130	S.CERAMIC	C1608 CH 1H 101J-T-A
C981	4030007040	S.CERAMIC	C1608 CH 1H 180J-T-A
C982	4030007090	S.CERAMIC	C1608 CH 1H 470J-T-A
C983	4030007040	S.CERAMIC	C1608 CH 1H 180J-T-A
C991	4030007040	S.CERAMIC	C1608 CH 1H 180J-T-A
C992	4030006960	S.CERAMIC	C1608 CH 1H 050C-T-A
C993	4030007070	S.CERAMIC	C1608 CH 1H 330J-T-A
C994	4030006930	S.CERAMIC	C1608 CH 1H 020C-T-A
C995	4030007040	S.CERAMIC	C1608 CH 1H 180J-T-A
C1000	4030006860	S.CERAMIC	C1608 JB 1H 102K-T-A
C1001	4030006860	S.CERAMIC	C1608 JB 1H 102K-T-A
C1002	4030006860	S.CERAMIC	C1608 JB 1H 102K-T-A
C1004	4030006860	S.CERAMIC	C1608 JB 1H 102K-T-A
C1005	4030006860	S.CERAMIC	C1608 JB 1H 102K-T-A
C1006	4030006860	S.CERAMIC	C1608 JB 1H 102K-T-A
RL231	6330000621	RELAY	SY-12-K
CP281	6910009670	S.CHECK P	HK3-S-T
CP282	6910009670	S.CHECK P	HK3-S-T
J252	6510019980	S.CONNECTOR	52808-1690
J253	6510019970	S.CONNECTOR	52808-1090
J254	6510019070	S.CONNECTOR	52559-3092
W301	7030003860	S.JUMPER	J3GE JPW V
W592	7030003860	S.JUMPER	J3GE JPW V
W981	7030003860	S.JUMPER	J3GE JPW V
W982	7030003860	S.JUMPER	J3GE JPW V
W993	7030003860	S.JUMPER	J3GE JPW V
WS1	8600036460	M.OTHER	SX2177 P251×J251PL
WS2	8970023261	M.OTHER	SX2177 1.5D COAXIAL-1 (2)/PL
WS3	8970023300	M.OTHER	SX2177 ICOM SHIELD (1)/PL
EP1	0910050966	PCB	B 5210F

S.=Surface mount

[PA UNIT]

REF NO.	ORDER NO.	DESCRIPTION	
Q101	1560001090	S.FET	2SK2854
Q121	1590002640	S.FET	MXR9745RT1
Q171	1590002690	FET	SRFJ7044
Q172	1590002690	FET	SRFJ7044
Q231	1590002690	FET	SRFJ7044
Q301	1590000680	S.TRANSISTOR	DTC114EUA T106
Q351	1590000680	S.TRANSISTOR	DTC114EUA T106
Q402	1590000680	S.TRANSISTOR	DTC114EUA T106
Q403	1580000690	S.FET	3SK291 (TE85R)
Q452	1590000680	S.TRANSISTOR	DTC114EUA T106
Q453	1580000690	S.FET	3SK291 (TE85R)
Q501	1520000460	S.TRANSISTOR	2SB1132 T100 R
Q502	1590000680	S.TRANSISTOR	DTC114EUA T106
Q511	1510000920	S.TRANSISTOR	2SA1577 T107 Q
Q512	1590000680	S.TRANSISTOR	DTC114EUA T106
Q513	1590000680	S.TRANSISTOR	DTC114EUA T106
Q514	1590000680	S.TRANSISTOR	DTC114EUA T106
Q521	1520000460	S.TRANSISTOR	2SB1132 T100 R
Q522	1590000680	S.TRANSISTOR	DTC114EUA T106
Q523	1590000680	S.TRANSISTOR	DTC114EUA T106
Q531	1510000920	S.TRANSISTOR	2SA1577 T107 Q
Q532	1590000680	S.TRANSISTOR	DTC114EUA T106
Q533	1590000680	S.TRANSISTOR	DTC114EUA T106
Q541	1590001330	S.TRANSISTOR	DTA114EUA T106
Q542	1590000680	S.TRANSISTOR	DTC114EUA T106
Q551	1590001330	S.TRANSISTOR	DTA114EUA T106
Q552	1590000680	S.TRANSISTOR	DTC114EUA T106
Q571	1520000460	S.TRANSISTOR	2SB1132 T100 R
Q572	1530002060	S.TRANSISTOR	2SC4081 T107 R
Q573	1590001330	S.TRANSISTOR	DTA114EUA T106
Q574	1530002060	S.TRANSISTOR	2SC4081 T107 R
Q575	1590000680	S.TRANSISTOR	DTC114EUA T106
Q576	1590001330	S.TRANSISTOR	DTA114EUA T106
Q591	1590000680	S.TRANSISTOR	DTC114EUA T106
D101	1790000620	S.DIODE	MA77 (TX)
D102	1790000620	S.DIODE	MA77 (TX)
D103	1790000620	S.DIODE	MA77 (TX)
D104	1790000620	S.DIODE	MA77 (TX)
D171	1160000060	S.DIODE	DAN202U T107
D172	1160000060	S.DIODE	DAN202U T107
D231	1160000060	S.DIODE	DAN202U T107
D261	1710000310	DIODE	MI407
D262	1790000980	S.DIODE	MA742 (TX)
D263	1790000980	S.DIODE	MA742 (TX)
D291	1750000510	S.DIODE	UM9401F
D292	1750000510	S.DIODE	UM9401F
D293	1750000550	S.DIODE	1SS355 TE-17
D301	1750000510	S.DIODE	UM9401F
D311	1750000510	S.DIODE	UM9401F
D312	1790001240	S.DIODE	MA2S728-(TX)
D313	1790001240	S.DIODE	MA2S728-(TX)
D341	1750000510	S.DIODE	UM9401F
D342	1750000510	S.DIODE	UM9401F
D343	1750000550	S.DIODE	1SS355 TE-17
D344	1750000310	S.DIODE	MI407
D401	1790001620	S.DIODE	1SV308 (TPL3)
D402	1790001620	S.DIODE	1SV308 (TPL3)
D403	1750000610	S.VARICAP	MA2SV0500L
D404	1790001620	S.DIODE	1SV308 (TPL3)
D405	1790001620	S.DIODE	1SV308 (TPL3)
D406	1750000610	S.VARICAP	MA2SV0500L
D407	1720000590	S.VARICAP	MA357 (TX)
D408	1720000590	S.VARICAP	MA357 (TX)
D409	1750000610	S.VARICAP	MA2SV0500L
D410	1750000610	S.VARICAP	MA2SV0500L
D451	1790001620	S.DIODE	1SV308 (TPL3)
D452	1790001620	S.DIODE	1SV308 (TPL3)
D453	1720000700	S.VARICAP	1SV305 (TPL3)
D454	1720000700	S.VARICAP	1SV305 (TPL3)
D455	1720000700	S.VARICAP	1SV305 (TPL3)
D456	1720000700	S.VARICAP	1SV305 (TPL3)
D481	1750000210	S.DIODE	1SV237 (TE85R)
D573	1160000060	S.DIODE	DAN202U T107
D574	1790000950	S.ZENER	MA8056-M (TX)
D575	1160000060	S.DIODE	DAN202U T107
D591	1160000060	S.DIODE	DAN202U T107
D601	1790000700	DIODE	DSA3A1
D602	1790000700	DIODE	DSA3A1

[PA UNIT]

REF NO.	ORDER NO.	DESCRIPTION	
L102	6200005050	S.COIL	NL 252018T-330J
L103	6200008570	S.COIL	LQN21A 6N8D04
L104	6200005730	S.COIL	ELJRE 39NG-F
L105	6200002860	S.COIL	NL 252018T-4R7J
L106	6200002040	S.COIL	NL 252018T-101J
L121	6180000870	COIL	LAL 03NA 6R8K
L122	6200003950	S.COIL	HF50ACC 322513-T
L123	6180000900	COIL	LAL 03NA 101K
L141	6200007770	S.COIL	LQN21A R10J04
L142	6200007800	S.COIL	LQN21A R18J04
L143	6200007790	S.COIL	LQN21A R15J04
L152	6200007740	S.COIL	LQN21A 47NJ04
L153	6200007750	S.COIL	LQN21A 56NJ04
L161	2040000490	COIL	EXC-ELDR25C
L162	6140002220	COIL	LR-270 (TR6X3X2 3A9)
L171	6140003040	COIL	LR-322B
L172	6140000610	COIL	LR-83
L173	6140003350	COIL	LR-376
L174	6140002030	COIL	LR-230 (SK-10M-15Y 120)
L175	6110001730	COIL	LA-262
L211	2040000490	COIL	EXC-ELDR25C
L212	2040000490	COIL	EXC-ELDR25C
L232	6110003560	COIL	LA-549
L233	2040000490	COIL	EXC-ELDR25C
L234	2040000490	COIL	EXC-ELDR25C
L261	6170000230	COIL	LW-25
L262	6110001670	COIL	LA-253
L263	6110001740	COIL	LA-263
L264	6110001680	COIL	LA-254
L265	6110001600	COIL	LA-243
L291	6110001540	COIL	LA-234
L292	6110001540	COIL	LA-234
L301	6200008360	S.COIL	0.25-1.9-13TL
L311	6170000230	COIL	LW-25
L312	6110002110	COIL	LA-382
L313	6110002130	COIL	LA-383
L314	6110001530	COIL	LA-233
L315	6110002110	COIL	LA-382
L316	6110002110	COIL	LA-382
L317	6110001520	COIL	LA-232
L341	6110001520	COIL	LA-232
L342	6110001520	COIL	LA-232
L351	6200008360	S.COIL	0.25-1.9-13TL
L352	6170000230	COIL	LW-25
L361	6170000230	COIL	LW-25
L401	6200007720	S.COIL	LQN21A 33NJ04
L402	6200007760	S.COIL	LQN21A 82NJ04
L403	6200003710	S.COIL	NL 252018T-2R7J
L404	6200003640	S.COIL	MLF1608K 100K-T
L406	6200007700	S.COIL	LQN21A 22NJ04
L407	6200007760	S.COIL	LQN21A 82NJ04
L408	6200007710	S.COIL	LQN21A 27NJ04
L410	6200003640	S.COIL	MLF1608K 100K-T
L453	6200008530	S.COIL	0.30-1.0-4TR 12N
L455	6200007230	S.COIL	LQN21A 15NJ04
L456	6200005620	S.COIL	ELJRE 4N7Z-F
L461	6200007680	S.COIL	LQN21A 12NJ04
L571	6200003950	S.COIL	HF50ACC 322513-T
L611	6200003240	S.COIL	NL 322522T-221J
L612	6200003240	S.COIL	NL 322522T-221J
L613	6910003570	COIL	2943-666663
L614	6910003570	COIL	2943-666663
L621	6200003950	S.COIL	HF50ACC 322513-T
L622	6200003550	S.COIL	MLF1608A 4R7K-T
L623	6200003550	S.COIL	MLF1608A 4R7K-T
L663	6200004480	S.COIL	MLF1608D R82K-T
L664	2040000490	COIL	EXC-ELDR25C
L665	2040000490	COIL	EXC-ELDR25C
R102	7030003220	S.RESISTOR	ERJ3GEYJ 150 V (15 Ω)
R104	7030003300	S.RESISTOR	ERJ3GEYJ 680 V (68 Ω)
R105	7030003520	S.RESISTOR	ERJ3GEYJ 472 V (4.7 kΩ)
R106	7030003520	S.RESISTOR	ERJ3GEYJ 472 V (4.7 kΩ)
R107	7030003420	S.RESISTOR	ERJ3GEYJ 681 V (680 Ω)
R108	7030008190	S.RESISTOR	ERJ12YJ330H (33 Ω)
R111	7030003400	S.RESISTOR	ERJ3GEYJ 471 V (470 Ω)
R112	7030003380	S.RESISTOR	ERJ3GEYJ 331 V (330 Ω)
R113	7030003380	S.RESISTOR	ERJ3GEYJ 331 V (330 Ω)
R114	7030003380	S.RESISTOR	ERJ3GEYJ 331 V (330 Ω)
R115	7030003440	S.RESISTOR	ERJ3GEYJ 102 V (1 kΩ)
R121	7030000230	S.RESISTOR	MCR10EZHJ 56 Ω (560)

S.=Surface mount

[PA UNIT]

REF NO.	ORDER NO.	DESCRIPTION	
R122	7030003480	S.RESISTOR	ERJ3GEYJ 222 V (2.2 kΩ)
R123	7030003520	S.RESISTOR	ERJ3GEYJ 472 V (4.7 kΩ)
R124	7030003410	S.RESISTOR	ERJ3GEYJ 561 V (560 Ω)
R125	7030009570	S.RESISTOR	ERJ1WYJ5R6H (5.6 Ω)
R126	7030000340	S.RESISTOR	MCR10EZHJ 470 Ω (471)
R127	7030000140	S.RESISTOR	MCR10EZHJ 10 Ω (100)
R161	7030000260	S.RESISTOR	MCR10EZHJ 100 Ω (101)
R162	7310003240	TRIMMER	EVN-2ACA00 B23 (202)
R164	7030003480	S.RESISTOR	ERJ3GEYJ 222 V (2.2 kΩ)
R172	7030006080	S.RESISTOR	ERJ1WYJ220H (22 Ω)
R173	7030006080	S.RESISTOR	ERJ1WYJ220H (22 Ω)
R174	7310003200	TRIMMER	EVN-2ACA00 B14 (103)
R175	7310003200	TRIMMER	EVN-2ACA00 B14 (103)
R176	7030003480	S.RESISTOR	ERJ3GEYJ 222 V (2.2 kΩ)
R177	7030003480	S.RESISTOR	ERJ3GEYJ 222 V (2.2 kΩ)
R178	7030007130	S.RESISTOR	ERJ1WYJ150H (15 Ω)
R179	7030007130	S.RESISTOR	ERJ1WYJ150H (15 Ω)
R180	7030006130	S.RESISTOR	ERJ1WYJ100H (10 Ω)
R181	7030006130	S.RESISTOR	ERJ1WYJ100H (10 Ω)
R182	7030007630	S.RESISTOR	MCR100JZHJ 0.68 Ω (R68)
R183	7030007630	S.RESISTOR	MCR100JZHJ 0.68 Ω (R68)
R201	7100000810	S.RESISTOR	ERX5WQK 12MH
R202	7030003500	S.RESISTOR	ERJ3GEYJ 332 V (3.3 kΩ)
R203	7030003500	S.RESISTOR	ERJ3GEYJ 332 V (3.3 kΩ)
R204	7030003500	S.RESISTOR	ERJ3GEYJ 332 V (3.3 kΩ)
R205	7030003500	S.RESISTOR	ERJ3GEYJ 332 V (3.3 kΩ)
R211	7030000340	S.RESISTOR	MCR10EZHJ 470 Ω (471)
R213	7030003200	S.RESISTOR	ERJ3GEYJ 100 V (10 Ω)
R214	7310003240	TRIMMER	EVN-2ACA00 B23 (202)
R215	7030003460	S.RESISTOR	ERJ3GEYJ 152 V (1.5 kΩ)
R231	7310003200	TRIMMER	EVN-2ACA00 B14 (103)
R232	7030003480	S.RESISTOR	ERJ3GEYJ 222 V (2.2 kΩ)
R233	7030003480	S.RESISTOR	ERJ3GEYJ 222 V (2.2 kΩ)
R234	7030003430	S.RESISTOR	ERJ3GEYJ 821 V (820 Ω)
R235	7030003430	S.RESISTOR	ERJ3GEYJ 821 V (820 Ω)
R261	7030007360	S.RESISTOR	ERJ1WYJ470H (47 Ω)
R262	7030003680	S.RESISTOR	ERJ3GEYJ 104 V (100 kΩ)
R263	7030003480	S.RESISTOR	ERJ3GEYJ 222 V (2.2 kΩ)
R264	7030003480	S.RESISTOR	ERJ3GEYJ 222 V (2.2 kΩ)
R266	7030003570	S.RESISTOR	ERJ3GEYJ 123 V (12 kΩ)
R267	7030003440	S.RESISTOR	ERJ3GEYJ 102 V (1 kΩ)
R268	7030003560	S.RESISTOR	ERJ3GEYJ 103 V (10 kΩ)
R269	7030003440	S.RESISTOR	ERJ3GEYJ 102 V (1 kΩ)
R301	7030003560	S.RESISTOR	ERJ3GEYJ 103 V (10 kΩ)
R302	7030006070	S.RESISTOR	ERJ12YJ101H (100 Ω)
R303	7030000340	S.RESISTOR	MCR10EZHJ 470 Ω (471)
R311	7030007360	S.RESISTOR	ERJ1WYJ470H (47 Ω)
R312	7030003680	S.RESISTOR	ERJ3GEYJ 104 V (100 kΩ)
R313	7030003440	S.RESISTOR	ERJ3GEYJ 102 V (1 kΩ)
R314	7030003440	S.RESISTOR	ERJ3GEYJ 102 V (1 kΩ)
R317	7030003550	S.RESISTOR	ERJ3GEYJ 822 V (8.2 kΩ)
R319	7030003550	S.RESISTOR	ERJ3GEYJ 822 V (8.2 kΩ)
R320	7030003520	S.RESISTOR	ERJ3GEYJ 472 V (4.7 kΩ)
R351	7030003560	S.RESISTOR	ERJ3GEYJ 103 V (10 kΩ)
R352	7030006180	S.RESISTOR	ERJ1WYJ101H (100 Ω)
R361	7030003640	S.RESISTOR	ERJ3GEYJ 473 V (47 kΩ)
R403	7030003470	S.RESISTOR	ERJ3GEYJ 182 V (1.8 kΩ)
R407	7030004040	S.RESISTOR	ERJ3GEYJ 4R7 V (4.7 Ω)
R408	7030003260	S.RESISTOR	ERJ3GEYJ 330 V (33 Ω)
R409	7030003680	S.RESISTOR	ERJ3GEYJ 104 V (100 kΩ)
R410	7030003440	S.RESISTOR	ERJ3GEYJ 102 V (1 kΩ)
R411	7030003740	S.RESISTOR	ERJ3GEYJ 334 V (330 kΩ)
R412	7030003710	S.RESISTOR	ERJ3GEYJ 184 V (180 kΩ)
R413	7030003720	S.RESISTOR	ERJ3GEYJ 224 V (220 kΩ)
R414	7030003740	S.RESISTOR	ERJ3GEYJ 334 V (330 kΩ)
R415	7030003330	S.RESISTOR	ERJ3GEYJ 121 V (120 Ω)
R416	7030003330	S.RESISTOR	ERJ3GEYJ 121 V (120 Ω)
R418	7030003440	S.RESISTOR	ERJ3GEYJ 102 V (1 kΩ)
R419	7030003680	S.RESISTOR	ERJ3GEYJ 104 V (100 kΩ)
R420	7030003680	S.RESISTOR	ERJ3GEYJ 104 V (100 kΩ)
R421	7030003680	S.RESISTOR	ERJ3GEYJ 104 V (100 kΩ)
R422	7030003380	S.RESISTOR	ERJ3GEYJ 331 V (330 Ω)
R423	7030003720	S.RESISTOR	ERJ3GEYJ 224 V (220 kΩ)
R424	7030003420	S.RESISTOR	ERJ3GEYJ 681 V (680 Ω)
R451	7030003470	S.RESISTOR	ERJ3GEYJ 182 V (1.8 kΩ)
R452	7030004040	S.RESISTOR	ERJ3GEYJ 4R7 V (4.7 Ω)
R453	7030004040	S.RESISTOR	ERJ3GEYJ 4R7 V (4.7 Ω)
R455	7030003460	S.RESISTOR	ERJ3GEYJ 152 V (1.5 kΩ)
R459	7030003680	S.RESISTOR	ERJ3GEYJ 104 V (100 kΩ)
R460	7030003700	S.RESISTOR	ERJ3GEYJ 154 V (150 kΩ)
R461	7030003740	S.RESISTOR	ERJ3GEYJ 334 V (330 kΩ)
R462	7030003740	S.RESISTOR	ERJ3GEYJ 334 V (330 kΩ)

[PA UNIT]

REF NO.	ORDER NO.	DESCRIPTION	
R463	7030003270	S.RESISTOR	ERJ3GEYJ 390 V (39 Ω)
R464	7030003680	S.RESISTOR	ERJ3GEYJ 104 V (100 kΩ)
R465	7030003210	S.RESISTOR	ERJ3GEYJ 120 V (12 Ω)
R468	7030003380	S.RESISTOR	ERJ3GEYJ 331 V (330 Ω)
R469	7030003750	S.RESISTOR	ERJ3GEYJ 394 V (390 kΩ)
R470	7030003680	S.RESISTOR	ERJ3GEYJ 104 V (100 kΩ)
R471	7030003730	S.RESISTOR	ERJ3GEYJ 274 V (270 kΩ)
R501	7030003640	S.RESISTOR	ERJ3GEYJ 473 V (47 kΩ)
R502	7030003440	S.RESISTOR	ERJ3GEYJ 102 V (1 kΩ)
R511	7030003640	S.RESISTOR	ERJ3GEYJ 473 V (47 kΩ)
R512	7030003440	S.RESISTOR	ERJ3GEYJ 102 V (1 kΩ)
R513	7030003560	S.RESISTOR	ERJ3GEYJ 103 V (10 kΩ)
R521	7030003640	S.RESISTOR	ERJ3GEYJ 473 V (47 kΩ)
R522	7030003440	S.RESISTOR	ERJ3GEYJ 102 V (1 kΩ)
R531	7030003640	S.RESISTOR	ERJ3GEYJ 473 V (47 kΩ)
R532	7030003440	S.RESISTOR	ERJ3GEYJ 102 V (1 kΩ)
R571	7510000910	S.THERMISTOR	NTCCF2012 4AH 473KC-T
R572	7510000910	S.THERMISTOR	NTCCF2012 4AH 473KC-T
R575	7030003450	S.RESISTOR	ERJ3GEYJ 122 V (1.2 kΩ)
R576	7030003560	S.RESISTOR	ERJ3GEYJ 103 V (10 kΩ)
R577	7030003440	S.RESISTOR	ERJ3GEYJ 102 V (1 kΩ)
R579	7030003670	S.RESISTOR	ERJ3GEYJ 823 V (82 kΩ)
R580	7030003660	S.RESISTOR	ERJ3GEYJ 683 V (68 kΩ)
R581	7030003460	S.RESISTOR	ERJ3GEYJ 152 V (1.5 kΩ)
R582	7510000910	S.THERMISTOR	NTCCF2012 4AH 473KC-T
R591	7030004040	S.RESISTOR	ERJ3GEYJ 4R7 V (4.7 Ω)
R601	7030003520	S.RESISTOR	ERJ3GEYJ 472 V (4.7 kΩ)
C101	4030009530	S.CERAMIC	C1608 CH 1H 030B-T-A
C102	4030011600	S.CERAMIC	C1608 JB 1C 104KT-N
C103	4510004590	ELECTROLYTIC	16 MV 470 HC
C104	4030011600	S.CERAMIC	C1608 JB 1C 104KT-N
C106	4030011600	S.CERAMIC	C1608 JB 1C 104KT-N
C109	4030011600	S.CERAMIC	C1608 JB 1C 104KT-N
C111	4030011600	S.CERAMIC	C1608 JB 1C 104KT-N
C113	4030011600	S.CERAMIC	C1608 JB 1C 104KT-N
C114	4030007080	S.CERAMIC	C1608 CH 1H 390J-T-A
C115	4030006980	S.CERAMIC	C1608 CH 1H 070D-T-A
C116	4030007080	S.CERAMIC	C1608 CH 1H 390J-T-A
C117	4030011600	S.CERAMIC	C1608 JB 1C 104KT-N
C118	4030011600	S.CERAMIC	C1608 JB 1C 104KT-N
C121	4030011600	S.CERAMIC	C1608 JB 1C 104KT-N
C123	4030011600	S.CERAMIC	C1608 JB 1C 104KT-N
C125	4030011600	S.CERAMIC	C1608 JB 1C 104KT-N
C126	4030004710	S.CERAMIC	C2012 JB 1H 471K-T-A
C127	4030011600	S.CERAMIC	C1608 JB 1C 104KT-N
C128	4030008960	S.CERAMIC	C2012 JB 1C 104K-T-A
C129	4030011600	S.CERAMIC	C1608 JB 1C 104KT-N
C141	4030008960	S.CERAMIC	C2012 JB 1C 104K-T-A
C144	4030007110	S.CERAMIC	C1608 CH 1H 680J-T-A
C145	4030006970	S.CERAMIC	C1608 CH 1H 060D-T-A
C146	4030007110	S.CERAMIC	C1608 CH 1H 680J-T-A
C147	4030009530	S.CERAMIC	C1608 CH 1H 030B-T-A
C148	4030007080	S.CERAMIC	C1608 CH 1H 390J-T-A
C151	4030007060	S.CERAMIC	C1608 CH 1H 270J-T-A
C152	4030010240	S.CERAMIC	C1608 JB 1H 391K-T-A
C153	4030007030	S.CERAMIC	C1608 CH 1H 150J-T-A
C154	4030007140	S.CERAMIC	C1608 CH 1H 121J-T-A
C155	4030007090	S.CERAMIC	C1608 CH 1H 470J-T-A
C156	4030009910	S.CERAMIC	C1608 CH 1H 040B-T-A
C161	4030008960	S.CERAMIC	C2012 JB 1C 104K-T-A
C163	4030011600	S.CERAMIC	C1608 JB 1C 104KT-N
C165	4030011600	S.CERAMIC	C1608 JB 1C 104KT-N
C167	4030008960	S.CERAMIC	C2012 JB 1C 104K-T-A
C169	4510004590	ELECTROLYTIC	16 MV 470 HC
C172	4030011760	S.CERAMIC	GRM44-1 SL 682J 200PT
C173	4030011760	S.CERAMIC	GRM44-1 SL 682J 200PT
C174	4030011600	S.CERAMIC	C1608 JB 1C 104KT-N
C175	4030011600	S.CERAMIC	C1608 JB 1C 104KT-N
C176	4030011600	S.CERAMIC	C1608 JB 1C 104KT-N
C178	4030011760	S.CERAMIC	GRM44-1 SL 682J 200PT
C179	4030011760	S.CERAMIC	GRM44-1 SL 682J 200PT
C183	4030011740	S.CERAMIC	GRM42-2 CH 201J 500PT
C185	4320001050	S.MICA	UC342H 3900J-T
C186	4320001050	S.MICA	UC342H 3900J-T
C187	4030011790	S.CERAMIC	GRM44-1 Y5V 684Z 100PT
C188	4510004600	ELECTROLYTIC	16 MV 1000 HC
C189	4030008960	S.CERAMIC	C2012 JB 1C 104K-T-A
C190	4320001120	S.MICA	UC342H2200J-T 220P
C191	4030011740	S.CERAMIC	GRM42-2 CH 201J 500PT
C193	4030006850	S.CERAMIC	C1608 JB 1H 471K-T-A

S.=Surface mount

[PA UNIT]

REF NO.	ORDER NO.	DESCRIPTION	
C195	4030011160	S.CERAMIC	GRM42-6 CH 150J 500PT
C196	4030006860	S.CERAMIC	C1608 JB 1H 102K-T-A
C197	4030006860	S.CERAMIC	C1608 JB 1H 102K-T-A
C198	4030006860	S.CERAMIC	C1608 JB 1H 102K-T-A
C199	4030006860	S.CERAMIC	C1608 JB 1H 102K-T-A
C200	4030006860	S.CERAMIC	C1608 JB 1H 102K-T-A
C201	4030011600	S.CERAMIC	C1608 JB 1C 104KT-N
C202	4030011600	S.CERAMIC	C1608 JB 1C 104KT-N
C203	4030011740	S.CERAMIC	GRM42-2 CH 201J 500PT
C204	4030011740	S.CERAMIC	GRM42-2 CH 201J 500PT
C207	4510004600	ELECTROLYTIC	16 MV 1000 HC
C212	4030004860	S.CERAMIC	C2012 CH 1H 090D-T-A
C213	4030004720	S.CERAMIC	C2012 JB 1H 102K-T-A
C214	4030004720	S.CERAMIC	C2012 JB 1H 102K-T-A
C216	4510004630	S.ELECTROLYTIC	ECEV1CA100SR
C217	4030004740	S.CERAMIC	C2012 JB 1H 472K-T-A
C218	4030004570	S.CERAMIC	C2012 SL 1H 470J-T-A
C219	4030006880	S.CERAMIC	C1608 JB 1H 472K-T-A
C220	4030011180	S.CERAMIC	GRM42-6 CH 220J 500PT
C231	4030011260	S.CERAMIC	GRM42-6 W5R 102K 500PT
C232	4030006880	S.CERAMIC	C1608 JB 1H 472K-T-A
C233	4030006860	S.CERAMIC	C1608 JB 1H 102K-T-A
C235	4030011210	S.CERAMIC	GRM42-6 CH 330J 500PT
C236	4030011210	S.CERAMIC	GRM42-6 CH 330J 500PT
C237	4030004570	S.CERAMIC	C2012 SL 1H 470J-T-A
C238	4030004740	S.CERAMIC	C2012 JB 1H 472K-T-A
C239	4030006880	S.CERAMIC	C1608 JB 1H 472K-T-A
C240	4030016580	S.CERAMIC	GRH111 CH 390J 500PT
C241	4030016580	S.CERAMIC	GRH111 CH 390J 500PT
C242	4030016590	S.CERAMIC	GRH111 CH 470J 500PT
C243	4030016590	S.CERAMIC	GRH111 CH 470J 500PT
C244	4030016570	S.CERAMIC	GRH111 CH 270J 500PT
C245	4030016560	S.CERAMIC	GRH111 CH 180J 500PT
C246	4030011260	S.CERAMIC	GRM42-6 W5R 102K 500PT
C247	4030006850	S.CERAMIC	C1608 JB 1H 471K-T-A
C250	4030006860	S.CERAMIC	C1608 JB 1H 102K-T-A
C261	4030016570	S.CERAMIC	GRH111 CH 270J 500PT
C262	4030006860	S.CERAMIC	C1608 JB 1H 102K-T-A
C264	4030011230	S.CERAMIC	GRM42-6 CH 390J 500PT
C265	4030011260	S.CERAMIC	GRM42-6 W5R 102K 500PT
C268	4030006860	S.CERAMIC	C1608 JB 1H 102K-T-A
C272	4030006860	S.CERAMIC	C1608 JB 1H 102K-T-A
C274	4030011230	S.CERAMIC	GRM42-6 CH 390J 500PT
C275	4030011210	S.CERAMIC	GRM42-6 CH 330J 500PT
C276	4030011180	S.CERAMIC	GRM42-6 CH 220J 500PT
C278	4030006860	S.CERAMIC	C1608 JB 1H 102K-T-A
C279	4030006860	S.CERAMIC	C1608 JB 1H 102K-T-A
C280	4030006850	S.CERAMIC	C1608 JB 1H 471K-T-A
C281	4030006860	S.CERAMIC	C1608 JB 1H 102K-T-A
C291	4030008560	S.CERAMIC	C1608 CH 1H 300J-T-A
C292	4030007020	S.CERAMIC	C1608 CH 1H 120J-T-A
C301	4030011260	S.CERAMIC	GRM42-6 W5R 102K 500PT
C302	4030006860	S.CERAMIC	C1608 JB 1H 102K-T-A
C303	4030006860	S.CERAMIC	C1608 JB 1H 102K-T-A
C311	4030011210	S.CERAMIC	GRM42-6 CH 330J 500PT
C312	4030006860	S.CERAMIC	C1608 JB 1H 102K-T-A
C313	4030004890	S.CERAMIC	C2012 CH 1H 150J-T-A
C314	4030004880	S.CERAMIC	C2012 CH 1H 120J-T-A
C317	4030006860	S.CERAMIC	C1608 JB 1H 102K-T-A
C318	4030004780	S.CERAMIC	C2012 CH 1H 010C-T-A
C319	4030004780	S.CERAMIC	C2012 CH 1H 010C-T-A
C321	4030006860	S.CERAMIC	C1608 JB 1H 102K-T-A
C322	4030011090	S.CERAMIC	GRM42-6 CH 070D 500PT
C323	4030011090	S.CERAMIC	GRM42-6 CH 070D 500PT
C324	4030011120	S.CERAMIC	GRM42-6 CH 100D 500PT
C326	4030011110	S.CERAMIC	GRM42-6 CH 090D 500PT
C327	4030011070	S.CERAMIC	GRM42-6 CH 050C 500PT
C328	4030011110	S.CERAMIC	GRM42-6 CH 090D 500PT
C329	4030006860	S.CERAMIC	C1608 JB 1H 102K-T-A
C331	4030011070	S.CERAMIC	GRM42-6 CH 050C 500PT
C332	4030011120	S.CERAMIC	GRM42-6 CH 100D 500PT
C341	4030007020	S.CERAMIC	C1608 CH 1H 120J-T-A
C344	4030011100	S.CERAMIC	GRM42-6 CH 080D 500PT
C345	4030011260	S.CERAMIC	GRM42-6 W5R 102K 500PT
C353	4030006860	S.CERAMIC	C1608 JB 1H 102K-T-A
C354	4030006860	S.CERAMIC	C1608 JB 1H 102K-T-A
C361	4030006880	S.CERAMIC	C1608 JB 1H 472K-T-A
C401	4030006880	S.CERAMIC	C1608 JB 1H 472K-T-A
C402	4030006860	S.CERAMIC	C1608 JB 1H 102K-T-A
C405	4030006860	S.CERAMIC	C1608 JB 1H 102K-T-A
C407	4030006850	S.CERAMIC	C1608 JB 1H 471K-T-A
C408	4030006860	S.CERAMIC	C1608 JB 1H 102K-T-A

[PA UNIT]

REF NO.	ORDER NO.	DESCRIPTION	
C409	4030011600	S.CERAMIC	C1608 JB 1C 104KT-N
C410	4030006860	S.CERAMIC	C1608 JB 1H 102K-T-A
C411	4030006860	S.CERAMIC	C1608 JB 1H 102K-T-A
C412	4030006860	S.CERAMIC	C1608 JB 1H 102K-T-A
C414	4030006850	S.CERAMIC	C1608 JB 1H 471K-T-A
C418	4030006860	S.CERAMIC	C1608 JB 1H 102K-T-A
C421	4030006860	S.CERAMIC	C1608 JB 1H 102K-T-A
C422	4030006860	S.CERAMIC	C1608 JB 1H 102K-T-A
C423	4030006860	S.CERAMIC	C1608 JB 1H 102K-T-A
C425	4030006860	S.CERAMIC	C1608 JB 1H 102K-T-A
C427	4030006860	S.CERAMIC	C1608 JB 1H 102K-T-A
C452	4030006990	S.CERAMIC	C1608 CH 1H 080D-T-A
C453	4030006860	S.CERAMIC	C1608 JB 1H 102K-T-A
C454	4030006860	S.CERAMIC	C1608 JB 1H 102K-T-A
C455	4030009530	S.CERAMIC	C1608 CH 1H 030B-T-A
C457	4030006860	S.CERAMIC	C1608 JB 1H 102K-T-A
C458	4030006860	S.CERAMIC	C1608 JB 1H 102K-T-A
C459	4030006860	S.CERAMIC	C1608 JB 1H 102K-T-A
C460	4030007010	S.CERAMIC	C1608 CH 1H 100D-T-A
C461	4030006860	S.CERAMIC	C1608 JB 1H 102K-T-A
C462	4030009530	S.CERAMIC	C1608 CH 1H 030B-T-A
C463	4030011600	S.CERAMIC	C1608 JB 1C 104KT-N
C469	4030011600	S.CERAMIC	C1608 JB 1C 104KT-N
C470	4030006860	S.CERAMIC	C1608 JB 1H 102K-T-A
C471	4030009500	S.CERAMIC	C1608 CH 1H 0R5B-T-A
C472	4030007030	S.CERAMIC	C1608 CH 1H 150J-T-A
C476	4030006860	S.CERAMIC	C1608 JB 1H 102K-T-A
C477	4030011600	S.CERAMIC	C1608 JB 1C 104KT-N
C478	4030011600	S.CERAMIC	C1608 JB 1C 104KT-N
C501	4030011600	S.CERAMIC	C1608 JB 1C 104KT-N
C502	4030006880	S.CERAMIC	C1608 JB 1H 472K-T-A
C511	4030011600	S.CERAMIC	C1608 JB 1C 104KT-N
C521	4030006880	S.CERAMIC	C1608 JB 1H 472K-T-A
C531	4030006880	S.CERAMIC	C1608 JB 1H 472K-T-A
C552	4030006860	S.CERAMIC	C1608 JB 1H 102K-T-A
C553	4030006860	S.CERAMIC	C1608 JB 1H 102K-T-A
C571	4030006880	S.CERAMIC	C1608 JB 1H 472K-T-A
C572	4030006880	S.CERAMIC	C1608 JB 1H 472K-T-A
C573	4030011600	S.CERAMIC	C1608 JB 1C 104KT-N
C574	4030006880	S.CERAMIC	C1608 JB 1H 472K-T-A
C575	4030011600	S.CERAMIC	C1608 JB 1C 104KT-N
C576	4510004430	S.ELECTROLYTIC	ECEV1CV220WR
C577	4030011600	S.CERAMIC	C1608 JB 1C 104KT-N
C578	4510004590	ELECTROLYTIC	16 MV 470 HC
C579	4030011600	S.CERAMIC	C1608 JB 1C 104KT-N
C580	4030006860	S.CERAMIC	C1608 JB 1H 102K-T-A
C581	4030006880	S.CERAMIC	C1608 JB 1H 472K-T-A
C582	4030006860	S.CERAMIC	C1608 JB 1H 102K-T-A
C583	4030006860	S.CERAMIC	C1608 JB 1H 102K-T-A
C591	4030011600	S.CERAMIC	C1608 JB 1C 104KT-N
C592	4030006880	S.CERAMIC	C1608 JB 1H 472K-T-A
C593	4030011600	S.CERAMIC	C1608 JB 1C 104KT-N
C594	4030011600	S.CERAMIC	C1608 JB 1C 104KT-N
C601	4030006850	S.CERAMIC	C1608 JB 1H 471K-T-A
C602	4030006880	S.CERAMIC	C1608 JB 1H 472K-T-A
C603	4030011600	S.CERAMIC	C1608 JB 1C 104KT-N
C604	4510004600	ELECTROLYTIC	16 MV 1000 HC
C613	4030011600	S.CERAMIC	C1608 JB 1C 104KT-N
C621	4030011600	S.CERAMIC	C1608 JB 1C 104KT-N
C622	4030011600	S.CERAMIC	C1608 JB 1C 104KT-N
C623	4030011600	S.CERAMIC	C1608 JB 1C 104KT-N
C624	4030006860	S.CERAMIC	C1608 JB 1H 102K-T-A
C626	4030006860	S.CERAMIC	C1608 JB 1H 102K-T-A
C627	4030011600	S.CERAMIC	C1608 JB 1C 104KT-N
C632	4030011600	S.CERAMIC	C1608 JB 1C 104KT-N
C641	4030006880	S.CERAMIC	C1608 JB 1H 472K-T-A
C651	4030006880	S.CERAMIC	C1608 JB 1H 472K-T-A
C652	4030011600	S.CERAMIC	C1608 JB 1C 104KT-N
C661	4030011600	S.CERAMIC	C1608 JB 1C 104KT-N
C662	4030011600	S.CERAMIC	C1608 JB 1C 104KT-N
C663	4030011600	S.CERAMIC	C1608 JB 1C 104KT-N
C664	4030011600	S.CERAMIC	C1608 JB 1C 104KT-N
C665	4030011600	S.CERAMIC	C1608 JB 1C 104KT-N
C666	4030011600	S.CERAMIC	C1608 JB 1C 104KT-N
C667	4030006880	S.CERAMIC	C1608 JB 1H 472K-T-A
C668	4030006880	S.CERAMIC	C1608 JB 1H 472K-T-A
C669	4030011600	S.CERAMIC	C1608 JB 1C 104KT-N
C670	4030011600	S.CERAMIC	C1608 JB 1C 104KT-N
C672	4030006850	S.CERAMIC	C1608 JB 1H 471K-T-A
C673	4030006850	S.CERAMIC	C1608 JB 1H 471K-T-A
C674	4030006850	S.CERAMIC	C1608 JB 1H 471K-T-A
C675	4030006850	S.CERAMIC	C1608 JB 1H 471K-T-A

S.=Surface mount

[PA UNIT]

REF NO.	ORDER NO.	DESCRIPTION	
C676	4030011600	S.CERAMIC	C1608 JB 1C 104KT-N
C677	4030011600	S.CERAMIC	C1608 JB 1C 104KT-N
C678	4030011600	S.CERAMIC	C1608 JB 1C 104KT-N
C679	4030011600	S.CERAMIC	C1608 JB 1C 104KT-N
C680	4030011600	S.CERAMIC	C1608 JB 1C 104KT-N
C681	4030011600	S.CERAMIC	C1608 JB 1C 104KT-N
C682	4030011600	S.CERAMIC	C1608 JB 1C 104KT-N
C683	4030011600	S.CERAMIC	C1608 JB 1C 104KT-N
C684	4030011600	S.CERAMIC	C1608 JB 1C 104KT-N
C685	4030006860	S.CERAMIC	C1608 JB 1H 102K-T-A
C686	4030006860	S.CERAMIC	C1608 JB 1H 102K-T-A
C687	4030006860	S.CERAMIC	C1608 JB 1H 102K-T-A
C688	4030006860	S.CERAMIC	C1608 JB 1H 102K-T-A
C689	4030006860	S.CERAMIC	C1608 JB 1H 102K-T-A
C690	4030006860	S.CERAMIC	C1608 JB 1H 102K-T-A
C691	4030006860	S.CERAMIC	C1608 JB 1H 102K-T-A
C692	4030006860	S.CERAMIC	C1608 JB 1H 102K-T-A
RL591	6330001550	RELAY	JV-12-KT
CP573	6910009670	S.CHECK P	HK3-S-T
CP574	6910009670	S.CHECK P	HK3-S-T
J160	6510021530	CONNECTOR	IMSA-9230B-1-04Z024-T
J161	6510021530	CONNECTOR	IMSA-9230B-1-04Z024-T
J172	6510007020	CONNECTOR	TMP-J01X-V6
J210	6510021530	CONNECTOR	IMSA-9230B-1-04Z024-T
J211	6510021530	CONNECTOR	IMSA-9230B-1-04Z024-T
J270	6510017150	CONNECTOR	TMP-S01X-C1
J571	6510018960	S.CONNECTOR	B2B-PH-SM3-TB
J621	6510019980	S.CONNECTOR	52808-1690
J641	6450000140	CONNECTOR	HSJ0807-01-010
J661	6510020080	S.CONNECTOR	52808-2090
F591	5210000130	FUSE	FGB 4A
F592	5220000230	HOLDER	S-N5054 #01
F593	5220000230	HOLDER	S-N5054 #01
W235	7030000010	S.JUMPER	MCR10EZHJ JPW (000)
W300	7030008240	S.JUMPER	ERJ12YJ0R00H
W301	7030008240	S.JUMPER	ERJ12YJ0R00H
W316	7030003860	S.JUMPER	ERJ3GE JPW V
W320	7030003860	S.JUMPER	ERJ3GE JPW V
W361	7120000470	JUMPER	ERDS2T0
W409	7030000010	S.JUMPER	MCR10EZHJ JPW (000)
W462	7030003860	S.JUMPER	ERJ3GE JPW V
W572	7030003860	S.JUMPER	ERJ3GE JPW V
WS1	8970023310	M.OTHER	SX2177 1.5D COAXIAL (2)/PA
WS2	8970022462	M.OTHER	SX1897 J BOARD SET-2 (1)/PA
WS3	8970023271	M.OTHER	SX2177 SPECIAL WIRE (1)/PA
WS4	8600036490	M.OTHER	SX2177 P601PA
WS6	8600036470	M.OTHER	SX2177 J611×612PA
WS7	8600034701	M.OTHER	SX2177 P651×J651PA
WS8	8970023340	M.OTHER	SX2177 J LEAD SET (1)/PA
EP1	0910050976	PCB	B 5211F
EP174	9018970370	TUBE	TUBE 20(d) L=25 mm

[FILTER BOARD]

REF NO.	ORDER NO.	DESCRIPTION	
IC1	1110002700	S.IC	NJM2904M-T1
Q1	1590000680	S.TRANSISTOR	DTC114EUA T106
Q2	1530002060	S.TRANSISTOR	2SC4081 T107 R
Q3	1530002060	S.TRANSISTOR	2SC4081 T107 R
Q4	1530002060	S.TRANSISTOR	2SC4081 T107 R
Q5	1530002060	S.TRANSISTOR	2SC4081 T107 R
Q6	1530002060	S.TRANSISTOR	2SC4081 T107 R
Q7	1530002060	S.TRANSISTOR	2SC4081 T107 R
Q8	1530002060	S.TRANSISTOR	2SC4081 T107 R
Q9	1530003090	S.TRANSISTOR	2SC4213-B (TE85R)
Q10	1530002060	S.TRANSISTOR	2SC4081 T107 R
Q11	1540000450	S.TRANSISTOR	2SD1623-T-TD
Q12	1590001870	S.TRANSISTOR	DTA114EE TL
D1	1750000300	S.DIODE	1SS302 (TE85R)
D2	1750000300	S.DIODE	1SS302 (TE85R)
D3	1750000300	S.DIODE	1SS302 (TE85R)
D4	1750000300	S.DIODE	1SS302 (TE85R)
D5	1750000300	S.DIODE	1SS302 (TE85R)
D6	1750000300	S.DIODE	1SS302 (TE85R)
D7	1750000300	S.DIODE	1SS302 (TE85R)
D8	1750000300	S.DIODE	1SS302 (TE85R)
D9	1790001210	S.DIODE	1SS375-TL
D10	1790001210	S.DIODE	1SS375-TL
D23	1750000300	S.DIODE	1SS302 (TE85R)
D24	1160000050	S.DIODE	DAP202U T107
D25	1750000640	S.DIODE	1SV312 (TE85L)
D26	1790001250	S.DIODE	MA2S111-(TX)
L1	6110001560	COIL	LA-236
L2	6110001630	COIL	LA-246
L5	6110003570	COIL	LA-550
L6	6110003570	COIL	LA-550
L7	6110003550	COIL	LA-547 (LA-214A)
L10	6140001800	COIL	LR-216 (T50-2)
L11	6140001800	COIL	LR-216 (T50-2)
L14	6140003450	COIL	LR-387 [EUR], [FRA], [ESP]
	6140003470	COIL	LR-389 [USA], [OTH]
L15	6140003460	COIL	LR-388
L18	6140002560	COIL	LR-293 (T50-10)
L19	6140002560	COIL	LR-293 (T50-10)
L22	6110002920	COIL	LA-481
L23	6110003580	COIL	LA-551
L26	6140001800	COIL	LR-216 (T50-2)
L27	6140001780	COIL	LR-214 (T50-2)
L30	6140002570	COIL	LR-294 (T50-2)
L31	6140002580	COIL	LR-295 (T50-2)
L33	6140003490	COIL	LR-391
L34	6200002040	S.COIL	NL 252018T-101J
L35	6200003950	S.COIL	HF50ACC 322513-T
L36	6200002040	S.COIL	NL 252018T-101J
L37	6200002040	S.COIL	NL 252018T-101J
L39	6200003950	S.COIL	HF50ACC 322513-T
L41	6200003950	S.COIL	HF50ACC 322513-T
L42	6200003950	S.COIL	HF50ACC 322513-T
L43	6200003950	S.COIL	HF50ACC 322513-T
L44	6200002040	S.COIL	NL 252018T-101J
L45	6200002040	S.COIL	NL 252018T-101J
L46	6200002040	S.COIL	NL 252018T-101J
L47	6200002040	S.COIL	NL 252018T-101J
L48	6200002040	S.COIL	NL 252018T-101J
L49	6200002040	S.COIL	NL 252018T-101J
L50	6140002560	COIL	LR-293 (T50-10)
L51	6200003950	S.COIL	HF50ACC 322513-T
L54	6200002040	S.COIL	NL 252018T-101J
L55	6200002040	S.COIL	NL 252018T-101J
L56	6200005010	S.COIL	NL 252018T-100J
L57	6200002040	S.COIL	NL 252018T-101J
L58	6200003950	S.COIL	HF50ACC 322513-T
L59	6200003950	S.COIL	HF50ACC 322513-T
L60	6200002040	S.COIL	NL 252018T-101J
L61	6200003950	S.COIL	HF50ACC 322513-T
L63	6200005010	S.COIL	NL 252018T-100J
L64	6200002040	S.COIL	NL 252018T-101J
L65	6200002040	S.COIL	NL 252018T-101J
L66	6200002040	S.COIL	NL 252018T-101J
L67	6200002040	S.COIL	NL 252018T-101J
L68	6200003590	S.COIL	EXCCL3225U1

S.=Surface mount

[FILTER BOARD]

REF NO.	ORDER NO.	DESCRIPTION	
L69	6200002040	S.COIL	NL 252018T-101J
L70	6200003550	S.COIL	MLF1608A 4R7K-T
L71	6200002040	S.COIL	NL 252018T-101J
L72	6200002040	S.COIL	NL 252018T-101J
L73	6200002040	S.COIL	NL 252018T-101J
L74	6200002040	S.COIL	NL 252018T-101J
L75	6200002040	S.COIL	NL 252018T-101J
L76	6200002040	S.COIL	NL 252018T-101J
L77	6200002040	S.COIL	NL 252018T-101J
L78	6200002040	S.COIL	NL 252018T-101J
L79	6200002040	S.COIL	NL 252018T-101J
L80	6200002040	S.COIL	NL 252018T-101J
L81	6200002040	S.COIL	NL 252018T-101J
L82	6200002040	S.COIL	NL 252018T-101J
L83	6200002040	S.COIL	NL 252018T-101J
L84	6200002040	S.COIL	NL 252018T-101J
L85	6200002040	S.COIL	NL 252018T-101J
L86	6200002040	S.COIL	NL 252018T-101J
L87	6180000900	COIL	LAL 03NA 101K
R2	7030007190	S.RESISTOR	ERJ12YJ220H (22 Ω)
R3	7030003560	S.RESISTOR	ERJ3GEYJ 103 V (10 kΩ)
R4	7030003550	S.RESISTOR	ERJ3GEYJ 822 V (8.2 kΩ)
R5	7030003440	S.RESISTOR	ERJ3GEYJ 102 V (1 kΩ)
R6	7030003640	S.RESISTOR	ERJ3GEYJ 473 V (47 kΩ)
R7	7030003680	S.RESISTOR	ERJ3GEYJ 104 V (100 kΩ)
R8	7540000130	ABSORBER	2P-50A-301
R9	7030003320	S.RESISTOR	ERJ3GEYJ 101 V (100 Ω)
R10	7030003320	S.RESISTOR	ERJ3GEYJ 101 V (100 Ω)
R11	7010003241	RESISTOR	PSD1/4V 47 Ω
R15	7030003440	S.RESISTOR	ERJ3GEYJ 102 V (1 kΩ)
R16	7030003320	S.RESISTOR	ERJ3GEYJ 101 V (100 Ω)
R17	7030003440	S.RESISTOR	ERJ3GEYJ 102 V (1 kΩ)
R18	7030003320	S.RESISTOR	ERJ3GEYJ 101 V (100 Ω)
R26	7030003560	S.RESISTOR	ERJ3GEYJ 103 V (10 kΩ)
R27	7030003440	S.RESISTOR	ERJ3GEYJ 102 V (1 kΩ)
R28	7030003440	S.RESISTOR	ERJ3GEYJ 102 V (1 kΩ)
R33	7030003440	S.RESISTOR	ERJ3GEYJ 102 V (1 kΩ)
R34	7030003440	S.RESISTOR	ERJ3GEYJ 102 V (1 kΩ)
R35	7030003440	S.RESISTOR	ERJ3GEYJ 102 V (1 kΩ)
R36	7030003440	S.RESISTOR	ERJ3GEYJ 102 V (1 kΩ)
R37	7030003440	S.RESISTOR	ERJ3GEYJ 102 V (1 kΩ)
R38	7030003440	S.RESISTOR	ERJ3GEYJ 102 V (1 kΩ)
R39	7030003440	S.RESISTOR	ERJ3GEYJ 102 V (1 kΩ)
R40	7030003440	S.RESISTOR	ERJ3GEYJ 102 V (1 kΩ)
R42	7030003480	S.RESISTOR	ERJ3GEYJ 222 V (2.2 kΩ)
R43	7030003480	S.RESISTOR	ERJ3GEYJ 222 V (2.2 kΩ)
R60	7030003480	S.RESISTOR	ERJ3GEYJ 222 V (2.2 kΩ)
R61	7030003320	S.RESISTOR	ERJ3GEYJ 101 V (100 Ω)
R62	7030003390	S.RESISTOR	ERJ3GEYJ 391 V (390 Ω)
R63	7030003290	S.RESISTOR	ERJ3GEYJ 560 V (56 Ω)
R64	7030003720	S.RESISTOR	ERJ3GEYJ 224 V (220 kΩ)
R65	7030003720	S.RESISTOR	ERJ3GEYJ 224 V (220 kΩ)
R66	7030003520	S.RESISTOR	ERJ3GEYJ 472 V (4.7 kΩ)
R67	7030000320	S.RESISTOR	MCR10EZHJ 330 Ω (331)
R68	7030003440	S.RESISTOR	ERJ3GEYJ 102 V (1 kΩ)
R69	7030003560	S.RESISTOR	ERJ3GEYJ 103 V (10 kΩ)
R70	7030003440	S.RESISTOR	ERJ3GEYJ 102 V (1 kΩ)
R71	7030003560	S.RESISTOR	ERJ3GEYJ 103 V (10 kΩ)
R72	7030003440	S.RESISTOR	ERJ3GEYJ 102 V (1 kΩ)
R73	7030003560	S.RESISTOR	ERJ3GEYJ 103 V (10 kΩ)
R74	7030003440	S.RESISTOR	ERJ3GEYJ 102 V (1 kΩ)
R75	7030003560	S.RESISTOR	ERJ3GEYJ 103 V (10 kΩ)
R76	7030003440	S.RESISTOR	ERJ3GEYJ 102 V (1 kΩ)
R77	7030003560	S.RESISTOR	ERJ3GEYJ 103 V (10 kΩ)
R78	7030003440	S.RESISTOR	ERJ3GEYJ 102 V (1 kΩ)
R79	7030003560	S.RESISTOR	ERJ3GEYJ 103 V (10 kΩ)
R80	7030003440	S.RESISTOR	ERJ3GEYJ 102 V (1 kΩ)
R81	7030003560	S.RESISTOR	ERJ3GEYJ 103 V (10 kΩ)
R82	7030003440	S.RESISTOR	ERJ3GEYJ 102 V (1 kΩ)
R83	7030003560	S.RESISTOR	ERJ3GEYJ 103 V (10 kΩ)
C1	4030007070	S.CERAMIC	C1608 CH 1H 330J-T-A
C2	4030009470	S.CERAMIC	C1608 CH 1H R75C-T-A
C3	4030007100	S.CERAMIC	C1608 CH 1H 560J-T-A
C4	4030007030	S.CERAMIC	C1608 CH 1H 150J-T-A
C5	4030007080	S.CERAMIC	C1608 CH 1H 390J-T-A
C6	4030006880	S.CERAMIC	C1608 JB 1H 472K-T-A
C7	4030006880	S.CERAMIC	C1608 JB 1H 472K-T-A
C15	4030006880	S.CERAMIC	C1608 JB 1H 472K-T-A

[FILTER BOARD]

REF NO.	ORDER NO.	DESCRIPTION	
C16	4030006880	S.CERAMIC	C1608 JB 1H 472K-T-A
C17	4010005360	CERAMIC	HM11SJ SL 301J 500V
C19	4010007590	CERAMIC	HM15SJ SL 681J 500V
C21	4010005930	CERAMIC	HM11SJ SL 391J 500V
C22	4030006880	S.CERAMIC	C1608 JB 1H 472K-T-A
C23	4030006880	S.CERAMIC	C1608 JB 1H 472K-T-A
C29	4030006880	S.CERAMIC	C1608 JB 1H 472K-T-A
C30	4030006880	S.CERAMIC	C1608 JB 1H 472K-T-A
C31	4010007610	CERAMIC	HM95SJ SL 241J 500V
C32	4010005810	CERAMIC	HM74SJ SL 111J 500V
C33	4010005880	CERAMIC	HM95SJ SL 271J 500V
C36	4030006880	S.CERAMIC	C1608 JB 1H 472K-T-A
C37	4030006880	S.CERAMIC	C1608 JB 1H 472K-T-A
C40	4010007610	CERAMIC	HM95SJ SL 241J 500V
C43	4030006880	S.CERAMIC	C1608 JB 1H 472K-T-A
C44	4030006880	S.CERAMIC	C1608 JB 1H 472K-T-A
C45	4010005930	CERAMIC	HM11SJ SL 391J 500V
C46	4010008160	CERAMIC	HM13SJ SL 431J 500V
C47	4010005870	CERAMIC	HM95SJ SL 221J 500V
C48	4010005810	CERAMIC	HM74SJ SL 111J 500V
C49	4010007490	CERAMIC	HM15SJ SL 561J 500V
C50	4030006880	S.CERAMIC	C1608 JB 1H 472K-T-A
C51	4030006880	S.CERAMIC	C1608 JB 1H 472K-T-A
C52	4010007500	CERAMIC	HM15SJ SL 751J 500V
C53	4010006410	CERAMIC	HM13SJ SL 471J 500V
C54	4010007500	CERAMIC	HM15SJ SL 751J 500V
C55	4010005820	CERAMIC	HM74SJ SL 121J 500V
C56	4010007500	CERAMIC	HM15SJ SL 751J 500V
C57	4030006880	S.CERAMIC	C1608 JB 1H 472K-T-A
C58	4610002050	S.TRIMMER	ECR-JC010 A12W
C59	4030007160	S.CERAMIC	C1608 CH 1H 181J-T-A
C62	4030010760	S.CERAMIC	C1608 CH 1H 331J-T-A
C63	4030010760	S.CERAMIC	C1608 CH 1H 331J-T-A
C64	4030007090	S.CERAMIC	C1608 CH 1H 470J-T-A
C65	4030006850	S.CERAMIC	C1608 JB 1H 471K-T-A
C66	4030006850	S.CERAMIC	C1608 JB 1H 471K-T-A
C67	4030006850	S.CERAMIC	C1608 JB 1H 471K-T-A
C69	4030006880	S.CERAMIC	C1608 JB 1H 472K-T-A
C70	4030006880	S.CERAMIC	C1608 JB 1H 472K-T-A
C71	4030006880	S.CERAMIC	C1608 JB 1H 472K-T-A
C72	4030006880	S.CERAMIC	C1608 JB 1H 472K-T-A
C73	4030006880	S.CERAMIC	C1608 JB 1H 472K-T-A
C74	4030006880	S.CERAMIC	C1608 JB 1H 472K-T-A
C75	4030006880	S.CERAMIC	C1608 JB 1H 472K-T-A
C76	4030006880	S.CERAMIC	C1608 JB 1H 472K-T-A
C78	4010005850	CERAMIC	HM95SJ SL 181J 500V
C79	4010005860	CERAMIC	HM95SJ SL 201J 500V
C80	4010007590	CERAMIC	HM15SJ SL 681J 500V
C81	4010006410	CERAMIC	HM13SJ SL 471J 500V
C82	4010007500	CERAMIC	HM15SJ SL 751J 500V
C84	4010007490	CERAMIC	HM15SJ SL 561J 500V
C87	4030006880	S.CERAMIC	C1608 JB 1H 472K-T-A
C88	4030006880	S.CERAMIC	C1608 JB 1H 472K-T-A
C89	4030006880	S.CERAMIC	C1608 JB 1H 472K-T-A
C90	4030006880	S.CERAMIC	C1608 JB 1H 472K-T-A
C91	4030006880	S.CERAMIC	C1608 JB 1H 472K-T-A
C92	4030006880	S.CERAMIC	C1608 JB 1H 472K-T-A
C93	4030006880	S.CERAMIC	C1608 JB 1H 472K-T-A
C94	4030006880	S.CERAMIC	C1608 JB 1H 472K-T-A
C95	4030006880	S.CERAMIC	C1608 JB 1H 472K-T-A
C96	4030006880	S.CERAMIC	C1608 JB 1H 472K-T-A
C97	4030006880	S.CERAMIC	C1608 JB 1H 472K-T-A
C98	4030006880	S.CERAMIC	C1608 JB 1H 472K-T-A
C99	4030006880	S.CERAMIC	C1608 JB 1H 472K-T-A
C100	4030006880	S.CERAMIC	C1608 JB 1H 472K-T-A
C101	4030006860	S.CERAMIC	C1608 JB 1H 102K-T-A
C102	4030006880	S.CERAMIC	C1608 JB 1H 472K-T-A
C103	4030006880	S.CERAMIC	C1608 JB 1H 472K-T-A
C104	4030006880	S.CERAMIC	C1608 JB 1H 472K-T-A
C105	4030006880	S.CERAMIC	C1608 JB 1H 472K-T-A
C110	4030006880	S.CERAMIC	C1608 JB 1H 472K-T-A
C111	4030006880	S.CERAMIC	C1608 JB 1H 472K-T-A
C112	4030006880	S.CERAMIC	C1608 JB 1H 472K-T-A
C113	4030006880	S.CERAMIC	C1608 JB 1H 472K-T-A
C114	4030006880	S.CERAMIC	C1608 JB 1H 472K-T-A
C115	4030006880	S.CERAMIC	C1608 JB 1H 472K-T-A
C116	4030006880	S.CERAMIC	C1608 JB 1H 472K-T-A
C117	4030006880	S.CERAMIC	C1608 JB 1H 472K-T-A
C118	4030006880	S.CERAMIC	C1608 JB 1H 472K-T-A
C119	4030006880	S.CERAMIC	C1608 JB 1H 472K-T-A
C120	4030006880	S.CERAMIC	C1608 JB 1H 472K-T-A
C121	4030006880	S.CERAMIC	C1608 JB 1H 472K-T-A

S.=Surface mount

[FILTER BOARD]

REF NO.	ORDER NO.	DESCRIPTION	
C122	4030006880	S.CERAMIC	C1608 JB 1H 472K-T-A
C123	4030008680	S.CERAMIC	C2012 JF 1C 105Z-T-A
C124	4030011600	S.CERAMIC	C1608 JB 1C 104KT-N
C125	4030011600	S.CERAMIC	C1608 JB 1C 104KT-N
C126	4030011600	S.CERAMIC	C1608 JB 1C 104KT-N
C127	4030011600	S.CERAMIC	C1608 JB 1C 104KT-N
C128	4030006880	S.CERAMIC	C1608 JB 1H 472K-T-A
C133	4030011600	S.CERAMIC	C1608 JB 1C 104KT-N
C135	4010005820	CERAMIC	HM74SJ SL 121J 500V
C136	4030011790	S.CERAMIC	GRM44-1 Y5V 684Z 100PT
C140	4030006860	S.CERAMIC	C1608 JB 1H 102K-T-A
C141	4030006860	S.CERAMIC	C1608 JB 1H 102K-T-A
C143	4010006410	CERAMIC	HM13SJ SL 471J 500V
C144	4030006880	S.CERAMIC	C1608 JB 1H 472K-T-A
C145	4030006880	S.CERAMIC	C1608 JB 1H 472K-T-A
C146	4030006880	S.CERAMIC	C1608 JB 1H 472K-T-A
C147	4030006880	S.CERAMIC	C1608 JB 1H 472K-T-A
C148	4030006880	S.CERAMIC	C1608 JB 1H 472K-T-A
C149	4030011600	S.CERAMIC	C1608 JB 1C 104KT-N
C151	4010005540	CERAMIC	HM60SJ SL 030C 500V
C152	4030006860	S.CERAMIC	C1608 JB 1H 102K-T-A
C153	4030006880	S.CERAMIC	C1608 JB 1H 472K-T-A
C154	4030006880	S.CERAMIC	C1608 JB 1H 472K-T-A
C155	4030006880	S.CERAMIC	C1608 JB 1H 472K-T-A
C156	4030006880	S.CERAMIC	C1608 JB 1H 472K-T-A
C157	4030006880	S.CERAMIC	C1608 JB 1H 472K-T-A
C158	4030008680	S.CERAMIC	C2012 JF 1C 105Z-T-A
C159	4030006880	S.CERAMIC	C1608 JB 1H 472K-T-A
C162	4030011080	S.CERAMIC	GRM42-6 CH 060D 500PT
C163	4030011080	S.CERAMIC	GRM42-6 CH 060D 500PT
C164	4030011160	S.CERAMIC	GRM42-6 CH 150J 500PT
C166	4030011730	S.CERAMIC	GRM42-6 CH 101J 500PT
C168	4030011230	S.CERAMIC	GRM42-6 CH 390J 500PT
C169	4030011510	S.CERAMIC	GRM42-6 CH 560J 500PT [EUR], [FRA], [ESP]
	4030011240	S.CERAMIC	GRM42-6 CH 470J 500PT [USA], [OTH]
C170	4030011230	S.CERAMIC	GRM42-6 CH 390J 500PT [EUR], [FRA], [ESP]
	4030011240	S.CERAMIC	GRM42-6 CH 470J 500PT [USA], [OTH]
C171	4030011180	S.CERAMIC	GRM42-6 CH 220J 500PT [EUR], [FRA], [ESP]
	4030011160	S.CERAMIC	GRM42-6 CH 150J 500PT [USA], [OTH]
C172	4030014460	S.CERAMIC	GRM42-6 CH 820J 500PT
C174	4030011510	S.CERAMIC	GRM42-6 CH 560J 500PT
C175	4030011730	S.CERAMIC	GRM42-6 CH 101J 500PT
C176	4030011730	S.CERAMIC	GRM42-6 CH 101J 500PT
C177	4030011180	S.CERAMIC	GRM42-6 CH 220J 500PT
C178	4030011550	S.CERAMIC	GRM42-6 CH 680J 500PT
C180	4030011550	S.CERAMIC	GRM42-6 CH 680J 500PT
C181	4030011730	S.CERAMIC	GRM42-6 CH 101J 500PT [EUR], [FRA], [ESP]
	4030014460	S.CERAMIC	GRM42-6 CH 820J 500PT [USA], [OTH]
C182	4030014460	S.CERAMIC	GRM42-6 CH 820J 500PT
C183	4030011730	S.CERAMIC	GRM42-6 CH 101J 500PT
C184	4030011730	S.CERAMIC	GRM42-6 CH 101J 500PT
C185	4030011210	S.CERAMIC	GRM42-6 CH 330J 500PT
C186	4030011730	S.CERAMIC	GRM42-6 CH 101J 500PT
C189	4030011600	S.CERAMIC	C1608 JB 1C 104KT-N
C190	4030011600	S.CERAMIC	C1608 JB 1C 104KT-N
C191	4030011600	S.CERAMIC	C1608 JB 1C 104KT-N
C192	4030011600	S.CERAMIC	C1608 JB 1C 104KT-N
C193	4030011120	S.CERAMIC	GRM42-6 CH 100D 500PT
C200	4030011050	S.CERAMIC	GRM42-6 CJ 030C 500PT [USA], [OTH] only
C201	4030011290	S.CERAMIC	GRM42-6 CH 240J 500PT
C202	4030006880	S.CERAMIC	C1608 JB 1H 472K-T-A
C203	4030006860	S.CERAMIC	C1608 JB 1H 102K-T-A
C204	4030007090	S.CERAMIC	C1608 CH 1H 470J-T-A
C205	4030006860	S.CERAMIC	C1608 JB 1H 102K-T-A
C206	4030006860	S.CERAMIC	C1608 JB 1H 102K-T-A
C207	4030006860	S.CERAMIC	C1608 JB 1H 102K-T-A
C208	4030006860	S.CERAMIC	C1608 JB 1H 102K-T-A
C209	4030006860	S.CERAMIC	C1608 JB 1H 102K-T-A
C210	4030006860	S.CERAMIC	C1608 JB 1H 102K-T-A
C211	4030006860	S.CERAMIC	C1608 JB 1H 102K-T-A
C213	4030012610	S.CERAMIC	C2012 JB 1C 474K-T-A
C214	4030006880	S.CERAMIC	C1608 JB 1H 472K-T-A
C215	4030011600	S.CERAMIC	C1608 JB 1C 104KT-N

[FILTER BOARD]

REF NO.	ORDER NO.	DESCRIPTION	
RL1	6330001330	RELAY	AG 201344
RL2	6330001430	RELAY	NA-12W-K
RL3	6330001430	RELAY	NA-12W-K
RL4	6330001150	RELAY	MZ-12DK
RL5	6330001150	RELAY	MZ-12DK
RL6	6330001150	RELAY	MZ-12DK
RL7	6330001150	RELAY	MZ-12DK
RL8	6330001150	RELAY	MZ-12DK
RL9	6330001150	RELAY	MZ-12DK
RL10	6330001150	RELAY	MZ-12DK
RL11	6330001150	RELAY	MZ-12DK
RL12	6330001150	RELAY	MZ-12DK
RL13	6330001150	RELAY	MZ-12DK
RL14	6330001150	RELAY	MZ-12DK
RL15	6330001150	RELAY	MZ-12DK
RL16	6330001150	RELAY	MZ-12DK
J4	6450001490	CONNECTOR	HLJ7001-01-3010
J5	6450001640	CONNECTOR	TCS5044-01-4111
J7	6450001650	CONNECTOR	HSJ0836-01-500
J8	6450001660	CONNECTOR	EX345GLB
J9	6510020080	S.CONNECTOR	52808-2090
J11	6510016170	CONNECTOR	52018-8835
J12	6510020080	S.CONNECTOR	52808-2090
J13	6510017150	CONNECTOR	TMP-S01X-C1
J14	6450001840	CONNECTOR	TCS7568-43-201
W15	7030003860	S.JUMPER	ERJ3GE JPW V
W16	7030003860	S.JUMPER	ERJ3GE JPW V
W17	7030003860	S.JUMPER	ERJ3GE JPW V
W18	7030003860	S.JUMPER	ERJ3GE JPW V
W19	7030009300	S.JUMPER	ERJ1WY0R00H
W20	7030009300	S.JUMPER	ERJ1WY0R00H
W23	7030003860	S.JUMPER	ERJ3GE JPW V
WS1	8970023280	M.OTHER	SX2177 1.5D COAXIAL (2)/FI
EP1	0910050996	PCB	B 5213F

[DRIVER BOARD]

REF NO.	ORDER NO.	DESCRIPTION	
Q100	1590002680	S.FET	MRF1508T1
Q200	1590002680	S.FET	MRF1508T1
R165	7030009560	S.RESISTOR	ERJ1WYJ181H
R166	7030000020	S.RESISTOR	MCR10EZHJ 1 Ω (010)
C168	4030006480	S.CERAMIC	GRM42-6 B 104K 50PT
C169	4030011740	S.CERAMIC	GRM42-2 CH 201J 500PT
W213	7030000010	S.JUMPER	MCR10EZHJ JPW (000)
EP1	0910050985	PCB	B 5212E

S.=Surface mount

SECTION 6 MECHANICAL PARTS AND DISASSEMBLY

[CHASSIS PARTS]

REF. NO.	ORDER NO.	DESCRIPTION	QTY.
J3	6510000370	Connector MR-DS [ANT1]	1
J4	6510000370	Connector MR-DS [ANT2]	1
W1	8900008850	OPC-874	1
W2	8900008860	OPC-875	1
W3	8900008880	OPC-877	1
W14	8900008700	OPC-852	1
W15	8900008870	OPC-876	1
W16	8900006980	OPC-682	1
EP1	8930021010	Domed plug DP-500	1
EP2	0910045921	Flexible PCB B-4598A	1
MF1	2710000580	Fan FBA06T12HF	1
SP1	2510000990	Speaker VS-66Y0811	1
MP1	8010017540	2177 Chassis	1
MP2	8110006060	1897 upper-cover (incl. MP10 and MP38)	1
MP3	8110006590	2177 lower-cover	1
MP7	8930049121	2177 fan holder-1	1
MP8	8820000530	Flang bolt M4 x 8 NI	1
MP10	8930015850	SP net	1
MP11	8930018520	TR crip (A)	1
MP12	8950004180	1691 contact base (A)	1
MP17	8310045920	2177 ANT plate	1
MP19	8810008660	Screw PH BT M3 x 8 NI-ZU	5
MP20	8810007410	Screw PH M3 x 6 NI	2
MP21	8810009610	Screw FH M2.6 x 6 ZK	5
MP22	8850000140	Flat washer M 4 NI BS	1
MP24	8810008990	Screw PH BT M2 x 10 ZK	1
MP25	8850001560	Ster washer M 4	1
MP26	8810008660	Screw PH BT M3 x 8 NI-ZU	4
MP27	8810008660	Screw PH BT M3 x 8 NI-ZU	5
MP28	8810008660	Screw PH BT M3 x 8 NI-ZU	6
MP32	8810007410	Screw PH M3 X 6 NI	2
MP33	8810008490	Setscrew H M2.6 x 8 NI	2
MP34	8810008490	Setscrew H M2.6 x 8 NI	2
MP35	8810008490	Setscrew H M2.6 x 8 NI	2
MP36	8810009610	Screw PH M2.6 x 6 ZK	5
MP37	8810008490	Setscrew H M2.6 x 8 NI	2
MP38	8930038650	Sheet BE	1
MP40	8930038820	Aluminum sheet V	1
MP49	8930028390	Sheet AH	5
MP60	8930042440	1897 SP holder	1
MP61	8810009610	Screw PH M2.6 x 6 ZK	4
MP62	8810009390	Screw PH BT M3 x 18 NI-ZU	4
MP63	8810007410	Screw PH M3 x 6 NI	2
MP65	8810008660	Screw PH BT M3 x 8 NI-ZU	2
MP74	8510011940	2177 plate	1
MP75	8810009510	Screw PH BT M2 x 4 NI-ZU	2
MP76	8510006440	ANT cover	1
MP77	8930048550	2177 clip	1
MP79	8930048960	Shield tape (B)	1
MP80	8930048970	Shield tape (C)	1
MP81	8930048960	Shield tape (B)	1
MP83	8930015640	Code holder	1
MP84	8930048120	Shield tape (A)	1
MP87	8930049110	Sponge (GC)	1
MP89	8930001160	Earth spring	1

[FRONT PARTS]

REF. NO.	ORDER NO.	DESCRIPTION	QTY.
S1	2250000290	Encorder SW-159 (EC24B50B)	1
W1	8900006040	Flat cable OPC-593	1
W2	8900006250	Cable OPC-610	1
MP1	8210015780	2177 front panel	1
MP2	8210015890	1691 rear panel (A)	1
MP3	8930047970	2177 menu key	1
MP4	8930047960	2177 mode key	1
MP5	8930048370	1691 UP/DOWN key (B)	1
MP6	8930036731	1691 4-key-1	1
MP7	8930036751	Spring (Y)-1	1
MP8	8930032340	1424 N-spring	1
MP9	8830001010	Hex nut (A)	2
MP10	8610010660	Knob N-237 (A) (incl. MP27)	1
MP11	8610010670	Knob N-238 (A)	2
MP12	8610010021	Konb N-239 base-1	1
MP13	8610010030	Knob N-239 cover	1
MP14	8610010040	Konb N-239 finger rest	1
MP15	8930036691	1691 release button-1	1
MP16	8930048090	2177 lens	1
MP17	8310036280	1691 window plate	1
MP18	8310036273	1691 brake plate-3 (incl. MP20)	1
MP19	8950004191	1691 contact base (B)-1	1
MP20	8930036740	1691 brake pad	2
MP21	8930037111	1691 brake sheet-1	1
MP22	8310036583	1691 caution label (S)-3	1
MP23	8810008990	Screw PH BT M2 x 10 ZK	2
MP24	8930038940	Sponge (EF)	1
MP25	8830001410	1897 nut	1
MP26	8610010360	Knob N260 (incl. MP28)	1
MP27	8610007510	Knob spring No. 7800	1
MP28	8610007510	Knob spring No. 7800	1
	8210015910	2177 front panel assembly (incl. MP1, MP5, MP6, MP16, MP17)	1
	8610010111	Knob N-239 assembly (incl. MP8, MP12, MP13, MP14, MP21)	1

[DISPLAY BOARD]

REF. NO.	ORDER NO.	DESCRIPTION	QTY.
J2	6450001630	Connector HSJ1406-01-050 [PHONES]	1
DS4	5030001670	LCD DLC-8309YBGF	1
DS5	5030001290	LED D2264	1
EP2	8930039790	LCD connector SRCN-1691-ZSS-505	2
MP1	8930036710	1691 LCD holder	1
MP3	8810009040	Setscrew H M2.6 x 10 NI	1
MP4	8830000180	Nut M 2.6 NI BS	1
MP5	8930043470	1897 front plate	1

[VR BOARD]

REF. NO.	ORDER NO.	DESCRIPTION	QTY.
R1	7210002780	Variable resistor RV-300 (RK0972210)	1
R2	7210002940	Variable resistor TP96D231E20-20F-10KB-1897	1
S1	2220000540	Switch SW-162 (SSSS22-2-11)	1

[MAIN BOARD]

REF. NO.	ORDER NO.	DESCRIPTION	QTY.
MP1	8510011950	2177 HPF case	1
MP2	8510005990	724 shield case cover	1
MP3	8510012400	1691 D/A case 2177 D/A case	1
MP4	8930014140	Earth spring (D)	1
MP5	8930014140	Earth spring (D)	1
MP6	8310045930	2177 shield plate	1
MP7	8510010460	1691 main shield plate	1
MP8	8930014140	Earth spring (D)	1
MP9	8930017200	752 earth spring	1
MP10	8930017200	752 earth spring	1
MP14	8510012410	2177 main S-plate	1

[DRIVER BOARD]

REF. NO.	ORDER NO.	DESCRIPTION	QTY.
MP1	8410002270	2177 heatsink	1

[PLL UNIT]

REF. NO.	ORDER NO.	DESCRIPTION	QTY.
MP1	8510012260	2177 PLL shield case	1
MP2	8510010850	1897 D/A case	1
MP5	8510005150	602 shield case	1
MP6	8510012140	2177 shield cover	1
MP7	8510005150	602 shield case	1
MP8	8510012140	2177 shield cover	1
MP9	8510005150	602 shield case	1
MP10	8510012140	2177 shield cover	1
MP11	8510010150	1691 D/A case	1
MP12	8510011980	2177 VCO case	1
MP13	8510011990	2177 VCO cover	1
MP14	8810009000	Screw PH No. 0 M2.6 x 5 ZK	4
MP15	8510011970	2177 OSC case	1
MP16	8930001170	Earth spring (A)	1
MP18	8510011250	1897 main shield plate	1
MP19	8510011960	2177 OSC cover	1
MP20	8930049151	2177 PLL spring-1	1
MP21	8930043100	Sponge (EU)	1
MP23	8930030220	Rubber sheet (L)	1
MP24	8930049460	2177 VCO angle	1
MP25	8930024170	Earth spring (G)	1
MP26	8930049470	Rubber sheet (AS)	1
MP27	8930049470	Rubber sheet (AS)	1
MP28	8930036870	Sponge (DZ)	1
MP29	8930014140	Earth spring (D)	1
MP30	8930017200	752 earth spring	1
MP31	8930017200	752 earth spring	1
MP32	890028380	SHEET (C)	1

[PA PARTS]

REF. NO.	ORDER NO.	DESCRIPTION	QTY.
F591	5210000130	Fuse FGB 4A	1
J19	6510001920	Connector 1490R [TUNER]	1
J641	6450000140	Connector HSJ0807-01-010	1
P8	6510003780	Connector LLR-06 [DC 13.8V]	1
MP101	8930014140	Earth spring (D)	1
MP231	8860001130	2177 rug	1
MP232	8930049100	2177 PA spring	1
MP233	8930014140	Earth spring (D)	1
MP234	8860001130	2177 rug	1
MP451	8510012150	2177 PA shield plate	1
MP501	8930024170	Earth spring (G)	1
MP502	8930024170	Earth spring (G)	1

[FILTER BOARD]

REF. NO.	ORDER NO.	DESCRIPTION	QTY.
J4	6450001490	Connector HLJ7001-01-3010 [ELEC-KEY]	1
J5	6450001640	Connector TCS5044-01-4111 [ACC]	1
J7	6450001650	Connector HSJ0836-01-500 [REMOTE]	1
J8	6450001660	Connector EX345GLB [RTTY]	1
J11	6510016170	Connector 52018-8835 [MIC]	1
J12	6510020080	Connector 52808-2090	1
J13	6510017150	Connector TMP-S01X-C1	1
J14	6450001840	Connector TCS7568-43-201 [DATA]	1
MP1	8930017200	752 earth spring	1
MP3	8930001170	Earth spring (A)	1

[UNPACKING]

REF. NO.	ORDER NO.	DESCRIPTION	QTY.
F1	5210000090	Fuse FGB 30A	2
F2	5210000130	Fuse FGB 4A	1
P1	5610000050	Electronic keyer plug AP330	1
P2	5610000170	RTTY key plug AP370	1
W1	8900006490	DC power cable OPC-025D	1
W2	8900006110	ACC cable OPC-596	1
MC1	7700002000	Hand microphone HM-103 ACC	1
MP1	8930007300	Mic hunger	1

Screw abbreviations BT: Self-tapping PH: Pan head
NI: Nickel NI-ZU: Nickel-Zinc
BS: Brass ZK: Black

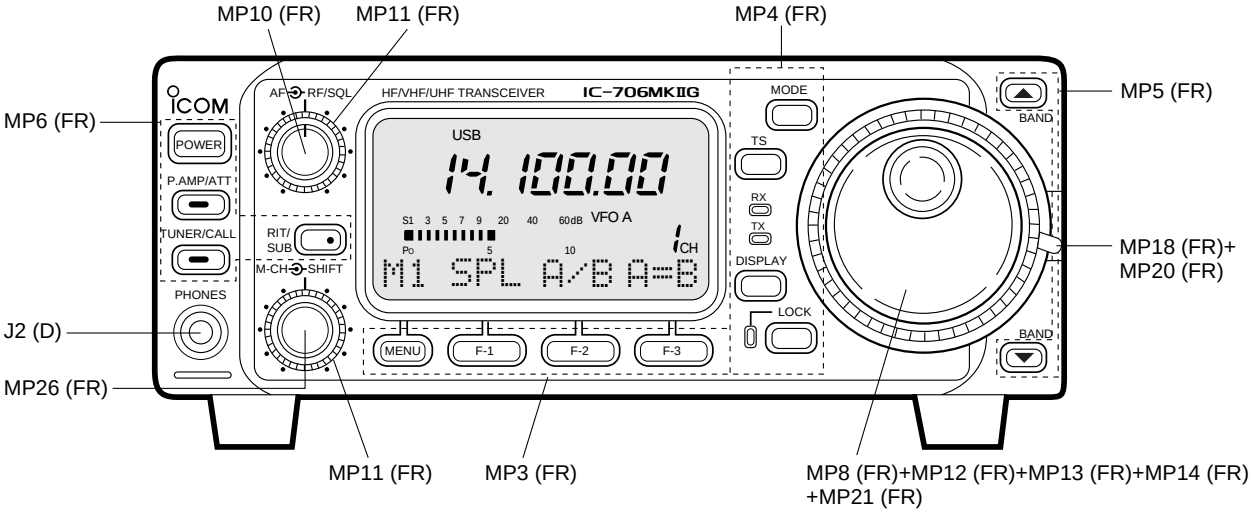
MP10 (FR)
MP11 (FR)
MP4 (FR)
MP5 (FR)
MP6 (FR)
MP18 (FR)+
MP20 (FR)
J2 (D)
MP26 (FR)
MP11 (FR)
MP3 (FR)
MP8 (FR)+MP12 (FR)+MP13 (FR)+MP14 (FR)
+MP21 (FR)
ICOM
HF/VHF/UHF TRANSCEIVER
IC-706MKIIG
POWER
P.AMP/ATT
TUNER/CALL
PHONES
AF
RF/SQL
RIT/
SUB
M-CH
SHIFT
USB
VFO A
CH
M1 SPL A/B A=B
MENU
F-1
F-2
F-3
MODE
TS
RX
TX
DISPLAY
LOCK
BAND

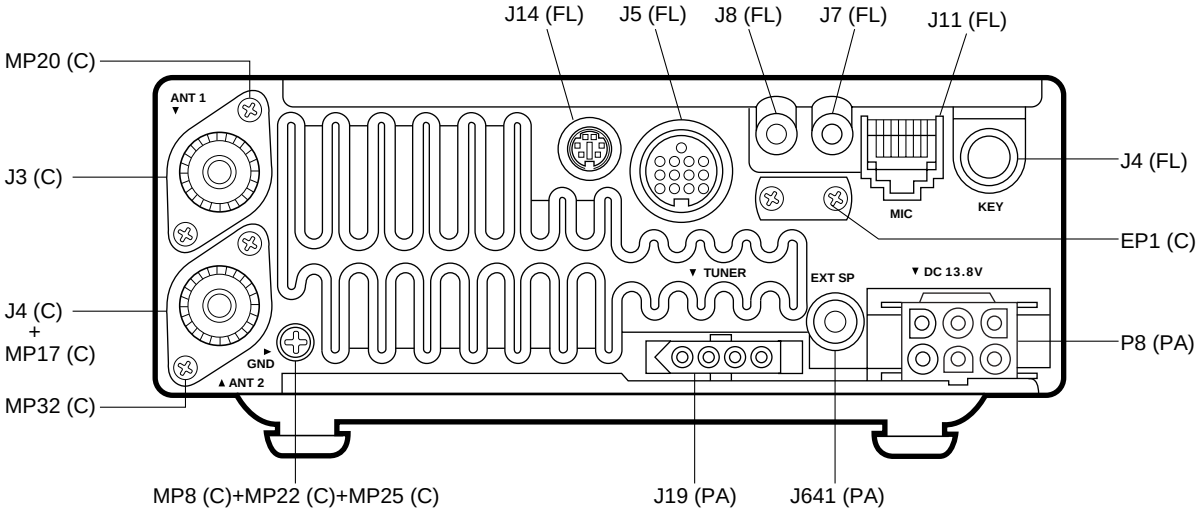
J14 (FL)
J5 (FL)
J8 (FL)
J7 (FL)
J11 (FL)
MP20 (C)
J3 (C)
J4 (FL)
EP1 (C)
J4 (C)
+
MP17 (C)
P8 (PA)
MP32 (C)
MP8 (C)+MP22 (C)+MP25 (C)
J19 (PA)
J641 (PA)
ANT 1
GND
ANT 2
MIC
KEY
TUNER
EXT SP
DC 13.8V

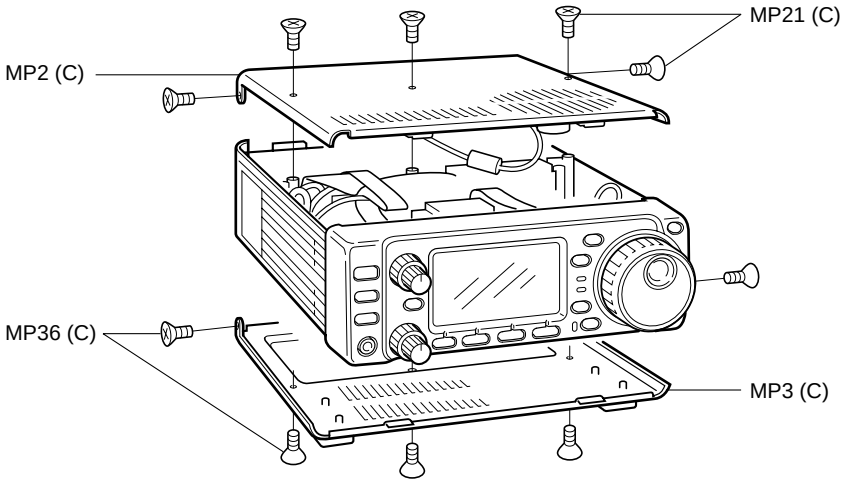
MP21 (C)
MP2 (C)
MP36 (C)
MP3 (C)

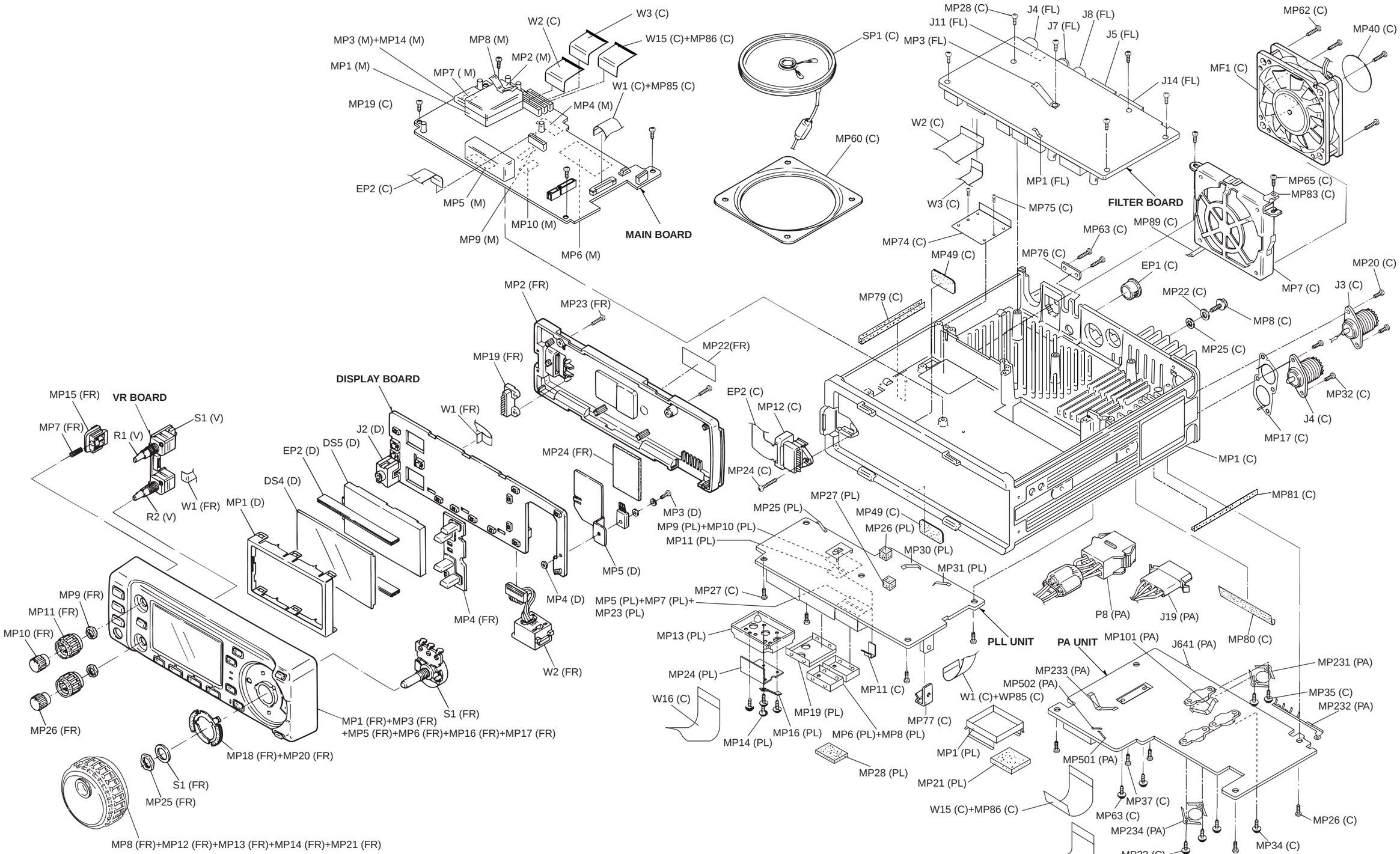

Unit abbreviations: (C): CHASSIS PARTS (FR): FRONT PARTS (D): DISPLAY BOARD (M): MAIN BOARD
(PL): PLL UNIT (PA): PA UNIT (FL): FILTER UNIT (H): HPF BOARD (V): VR BOARD

SECTION 7 SEMI-CONDUCTOR INFORMATION

• TRANSISTOR AND FET'S

2SA1576 R (Symbol: FR)	**2SA1577 Q** (Symbol: FR)	**2SB1123T** (Symbol: BF)	**2SB1132R** (Symbol: BA)	**2SB1143 S** E C B
2SC4081 R (Symbol: BR)	**2SC4116 GR** (Symbol: LG)	**2SC4213 B** (Symbol: AB)	**2SC4403-3** (Symbol: LY3)	**2SC4405-3** (Symbol: OY3)
2SD1619 (Symbol: DB)	**2SD1623** (Symbol: DF)	**2SK210 GR** (Symbol: YG) D S G	**2SK2171-4** (Symbol: KM) S G D G	**2SK2854** (Symbol: UP) G S D S
2SK508 K52 (Symbol: K52) S D G	**2SK880 Y** (Symbol: XY) S D G	**2SK882 GR** (Symbol: TG) D G S	**3SK126 O** (Symbol: UC) D S G2 G1	**3SK291** (Symbol: UF) D S G2 G1
CPH3404 (Symbol: KD) G S D	**DTA114EE** (Symbol: 14)	**DTA114EU** (Symbol: 14)	**DTA144EU** (Symbol: 16)	**DTC114EE** (Symbol: 24)
DTC114EU (Symbol: 24)	**DTC144EE** (Symbol: 24)	**MRF1508T1** (Symbol: 1508) S G D S	**MXR9745RT1** (Symbol: RG) G S D S	**RN1202** E C B
SRFJ7044 (Symbol: SRFJ7044) S G S S D S	**UMC1NTR** (Symbol: C1)	**UMC3N TR** (Symbol: C3)	**XP4111** (Symbol: 9U) E1 B1 C2 C1 B2 E2	

• DIODES

1SS302 (Symbol: C3)	**1SS355** (Symbol: A)	**1SS375** (Symbol: FH)	**1SS385** (Symbol: 09)	**1SV237** (Symbol: BB)
1SV265 (Symbol: LV)	**1SV305** (Symbol: TV)	**1SV308** (Symbol: TX)	**1SV312** (Symbol: BB)	**DA221** (Symbol: K)
DAN202U (Symbol: N)	**DAN222** (Symbol: N)	**DAP202U** (Symbol: P)	**DAP222** (Symbol: P)	**HSB88WSTR** (Symbol: Silver line)
KV1470TL (Symbol: F7)	**MA114** (Symbol: 1E)	**MA2S077** (Symbol: S)	**MA2S111** (Symbol: A)	**MA2S728** (Symbol: B)
MA2SV0500L (Symbol: A)	**MA304B** (Symbol: 7R)	**MA357** (Symbol: NL)	**MA717WK** (Symbol: M3D)	**MA742** (Symbol: M1U)
MA77 (Symbol: 4B)	**MA8027** (Symbol: 2^7)	**MA8033** (Symbol: 3_3)	**MA8036L** (Symbol: 3_6)	**MA8056M** (Symbol: 5-6)
MA8068M (Symbol: 6-8)	**MA862** (Symbol: M1I)	**RD12M T2B2** (Symbol: 122)	**UM9401F**	

SECTION 8 BOARD LAYOUT

8-1 DISPLAY BOARD

• DISPLAY BOARD (TOP VIEW)

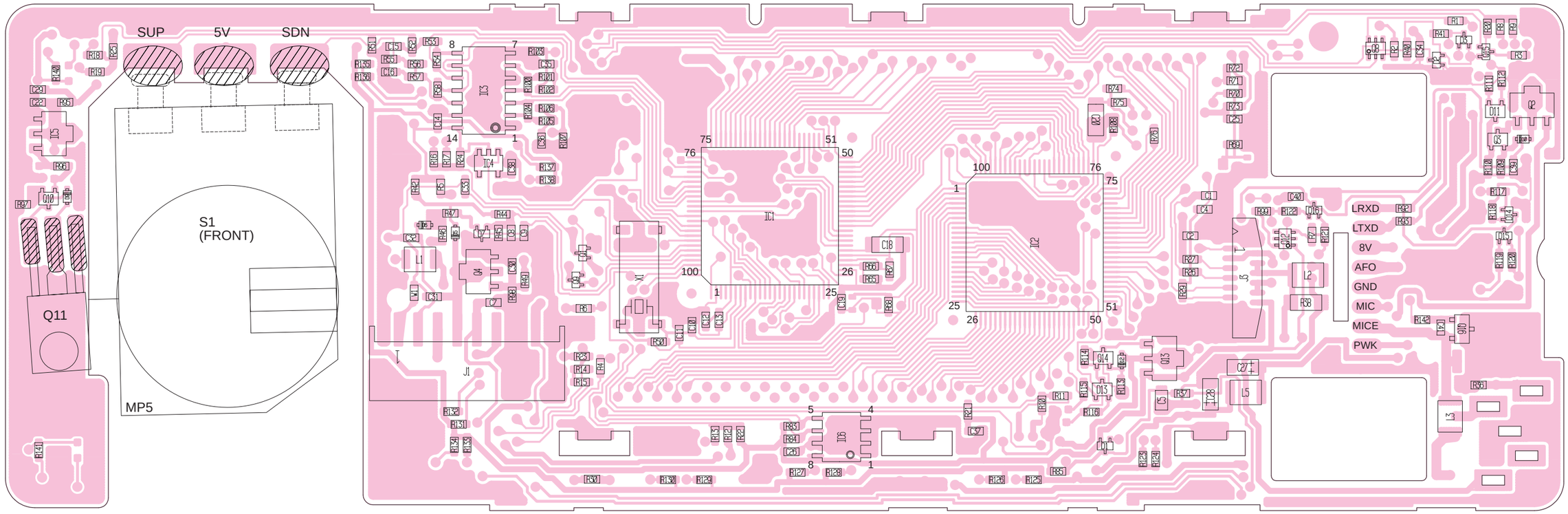

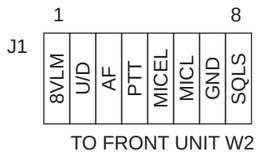

• VR BOARD

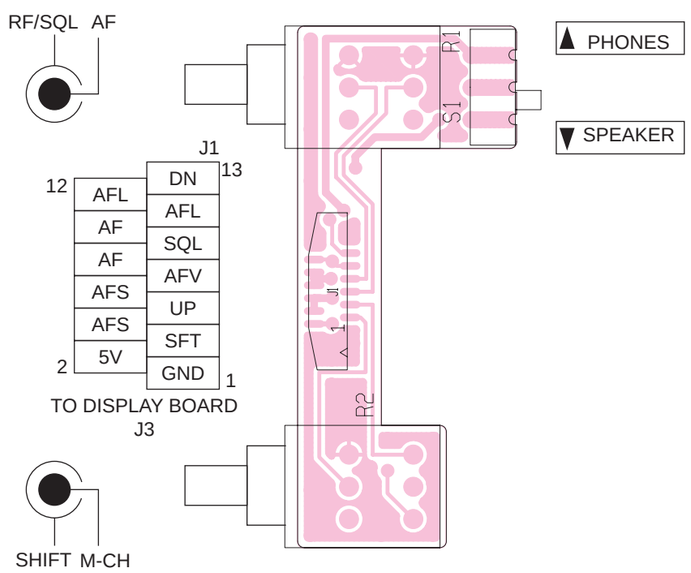

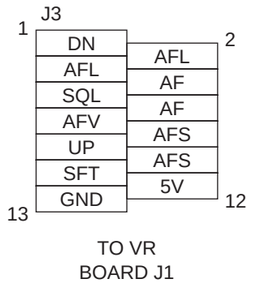

• **DISPLAY BOARD (BOTTOM VIEW)**

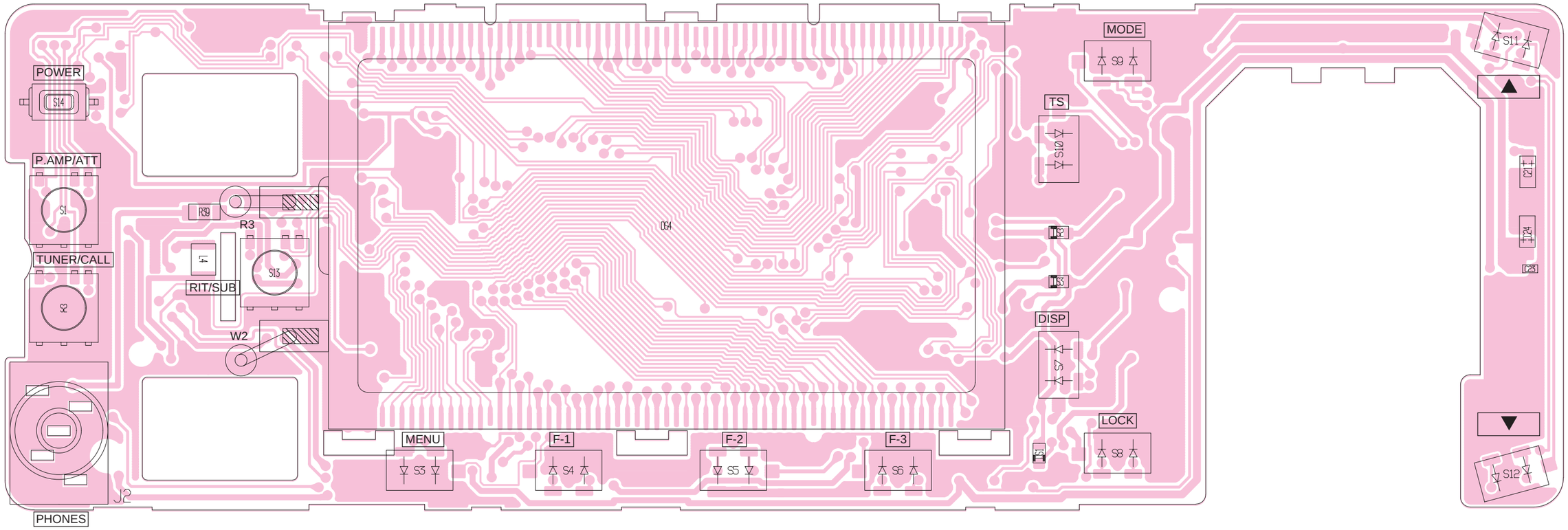

8-2 MAIN BOARD

• MAIN BOARD (TOP VIEW)

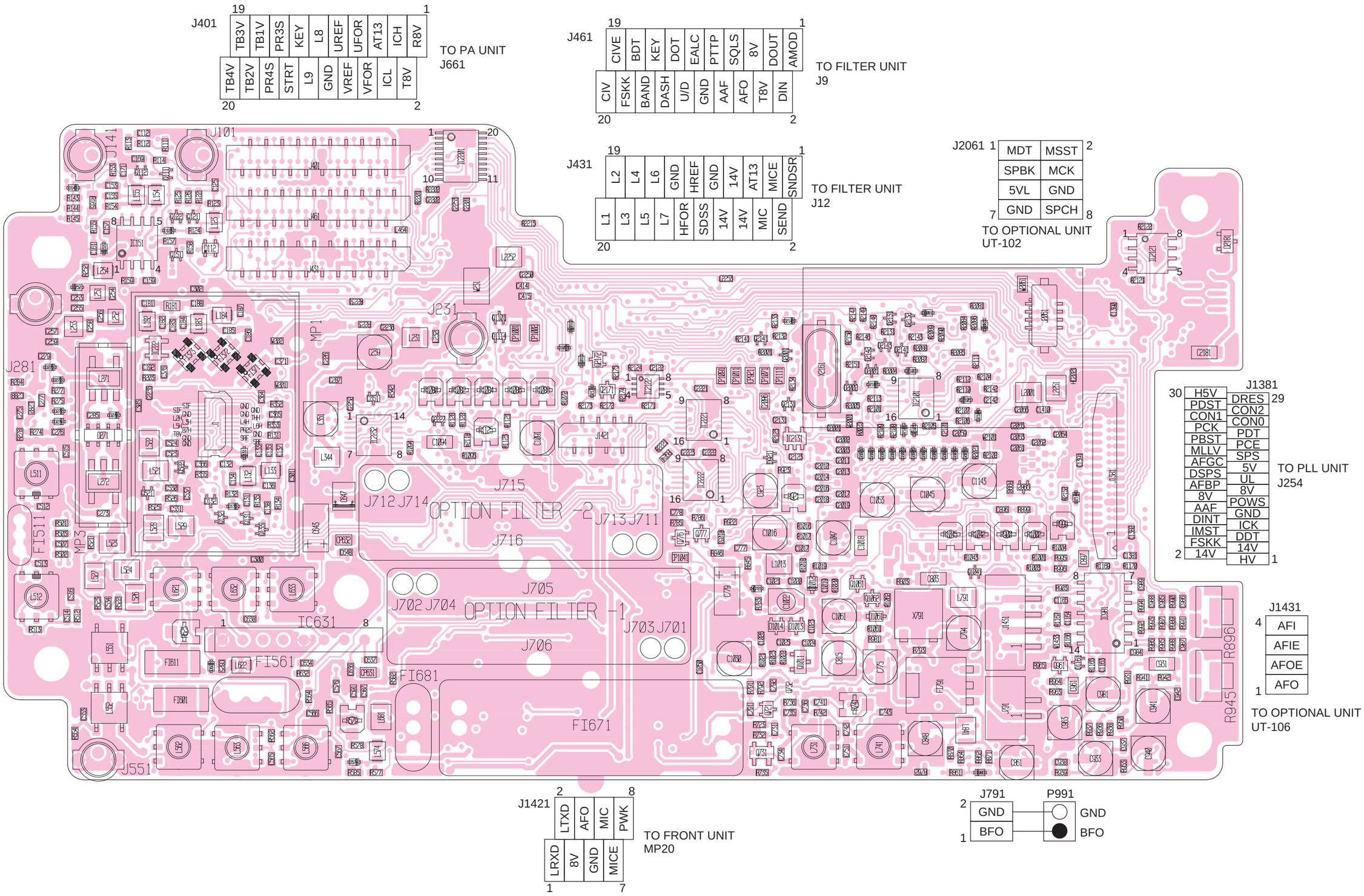

• **MAIN BOARD (BOTTOM VIEW)**

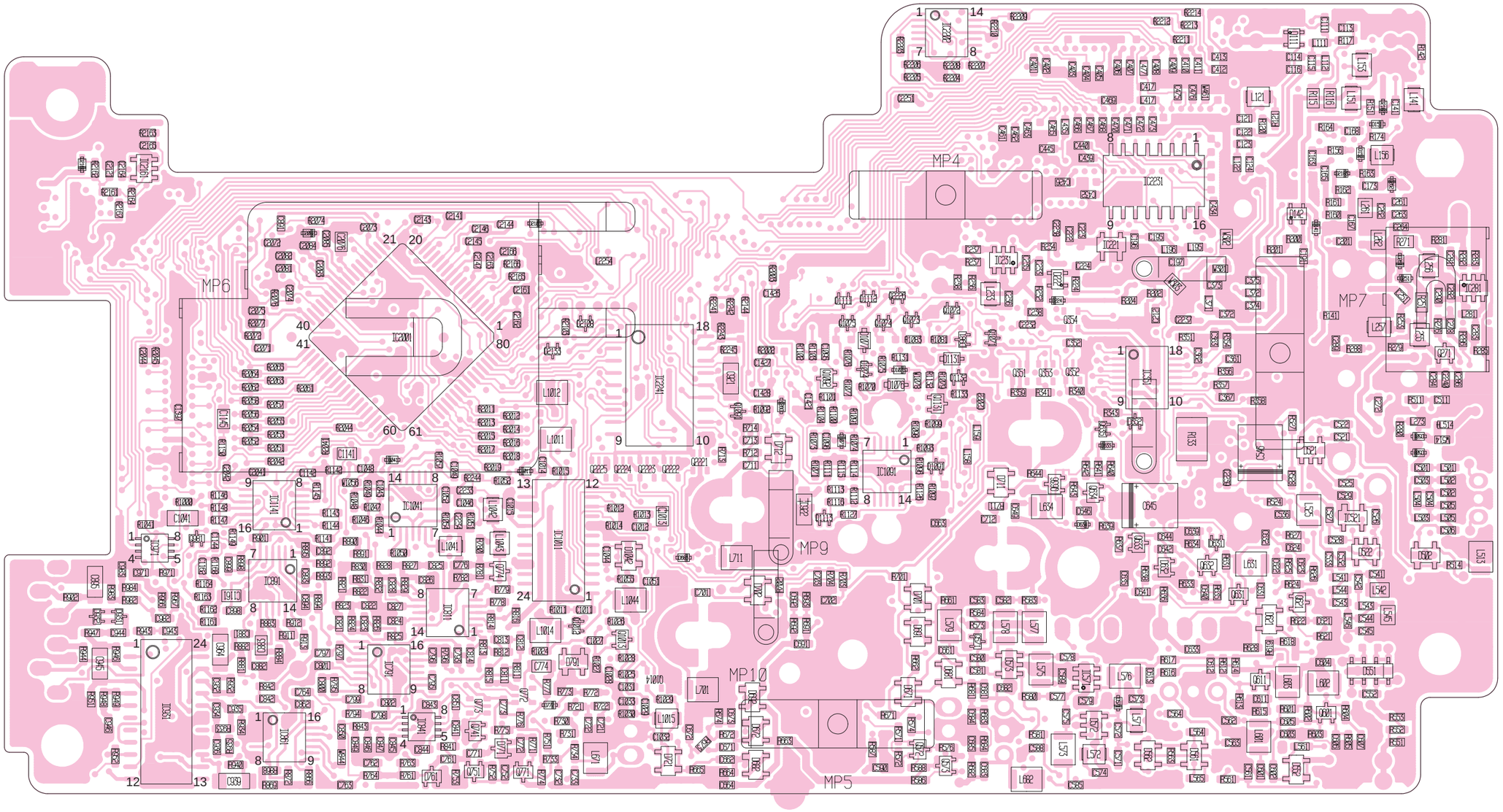

8-6 HPF AND DRIVER BOARDS

• HPF BOARD (TOP VIEW)

TO MAIN UNIT J1

J101

10									1
SRF	SRF	GND	PA2S	L6H	L4H	THH	GND	GND	GND
GND	GND	T8V	B7H	L5H	L3H	L2H	GND	SIF	SIF
11									20

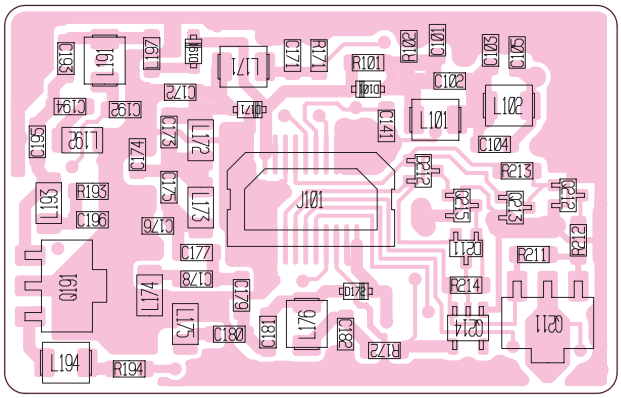

• DRIVER BOARD (TOP VIEW)

TO PA UNIT
J210

J200

4			1
GND	GND	VUI	VUI

TO PA UNIT
J160

J100

4			1
GND	GND	HFI	HFI

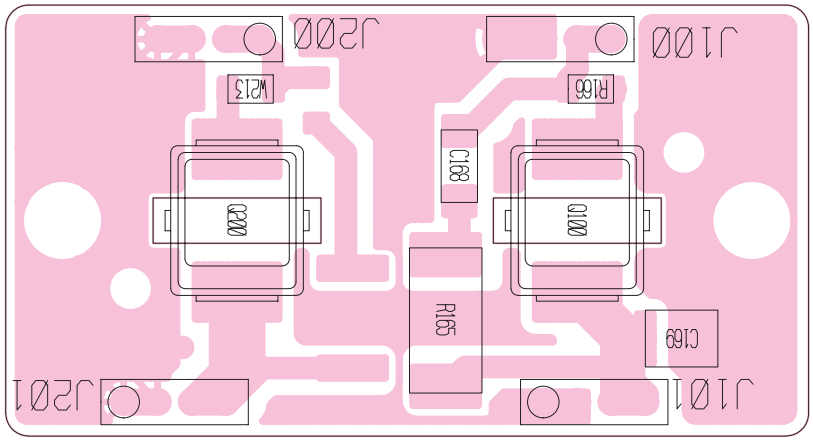

J201

4			1
GND	GND	VUO	VUO

TO PA UNIT
J211

J101

4			1
GND	GND	HFO	HFO

TO PA UNIT
J161

• **HPF BOARD (BOTTOM VIEW)**

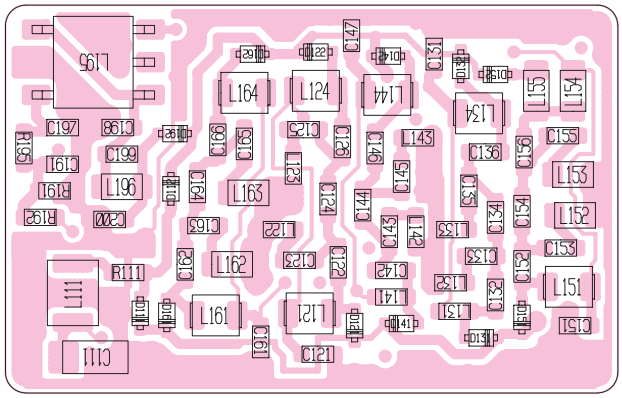

• **DRIVER BOARD (BOTTOM VIEW)**

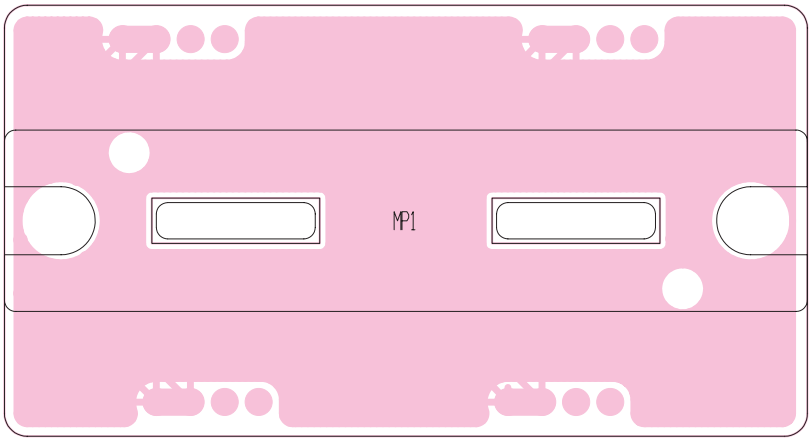

8-4 PA UNIT

• PA UNIT (TOP VIEW)

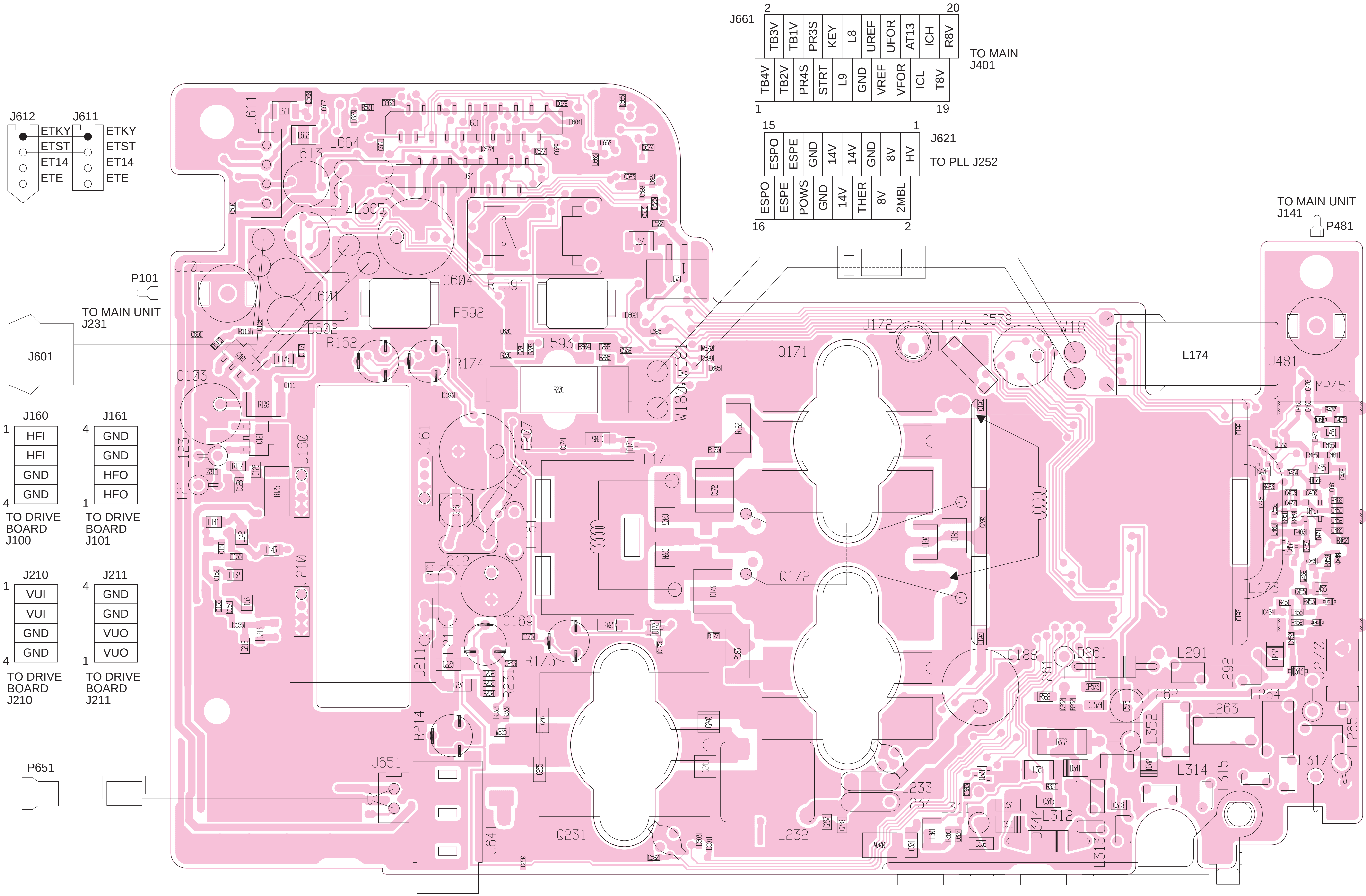

• **PA UNIT (BOTTOM VIEW)**

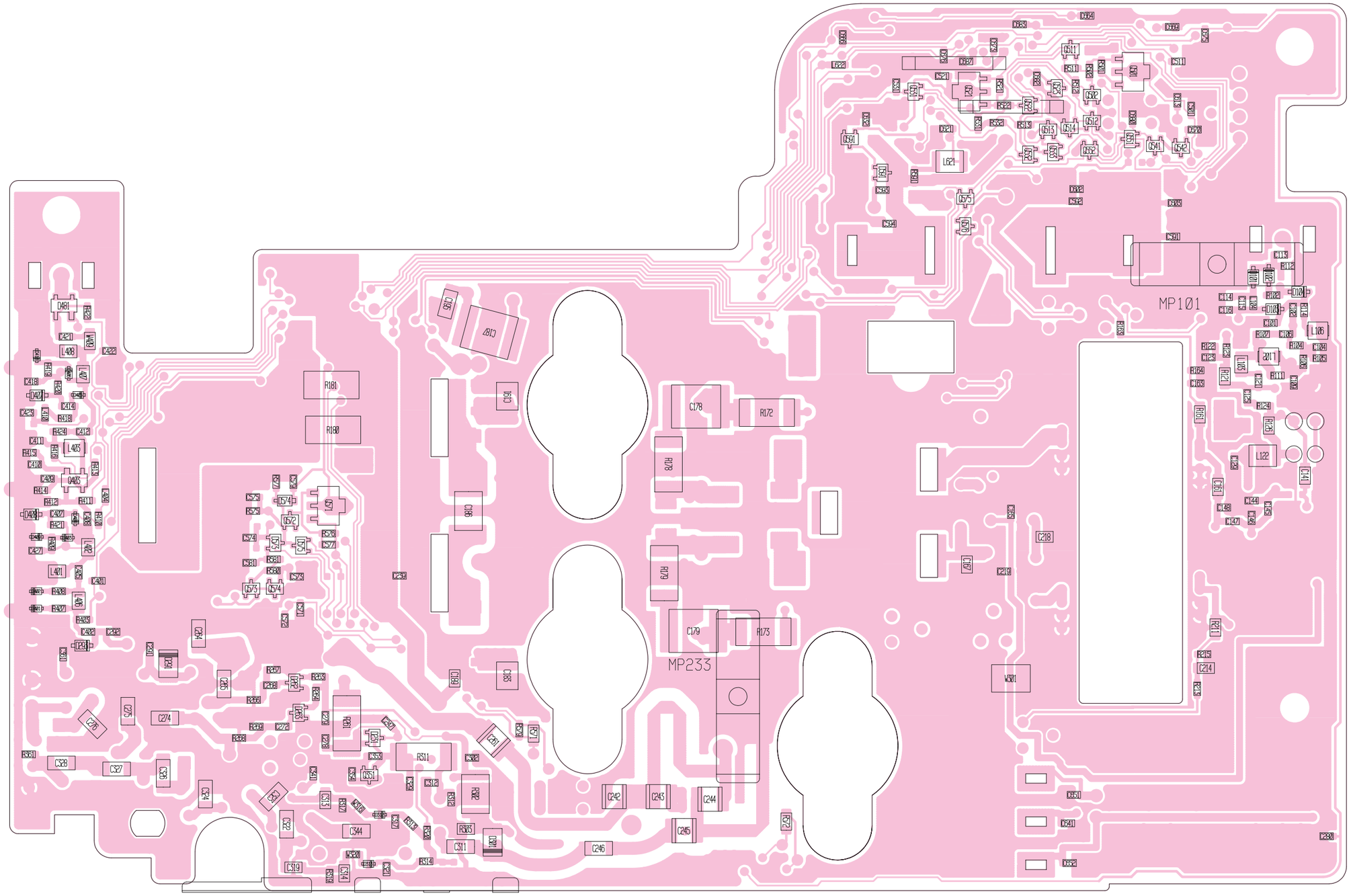

8-3 PLL UNIT

• **PLL UNIT (TOP VIEW)**

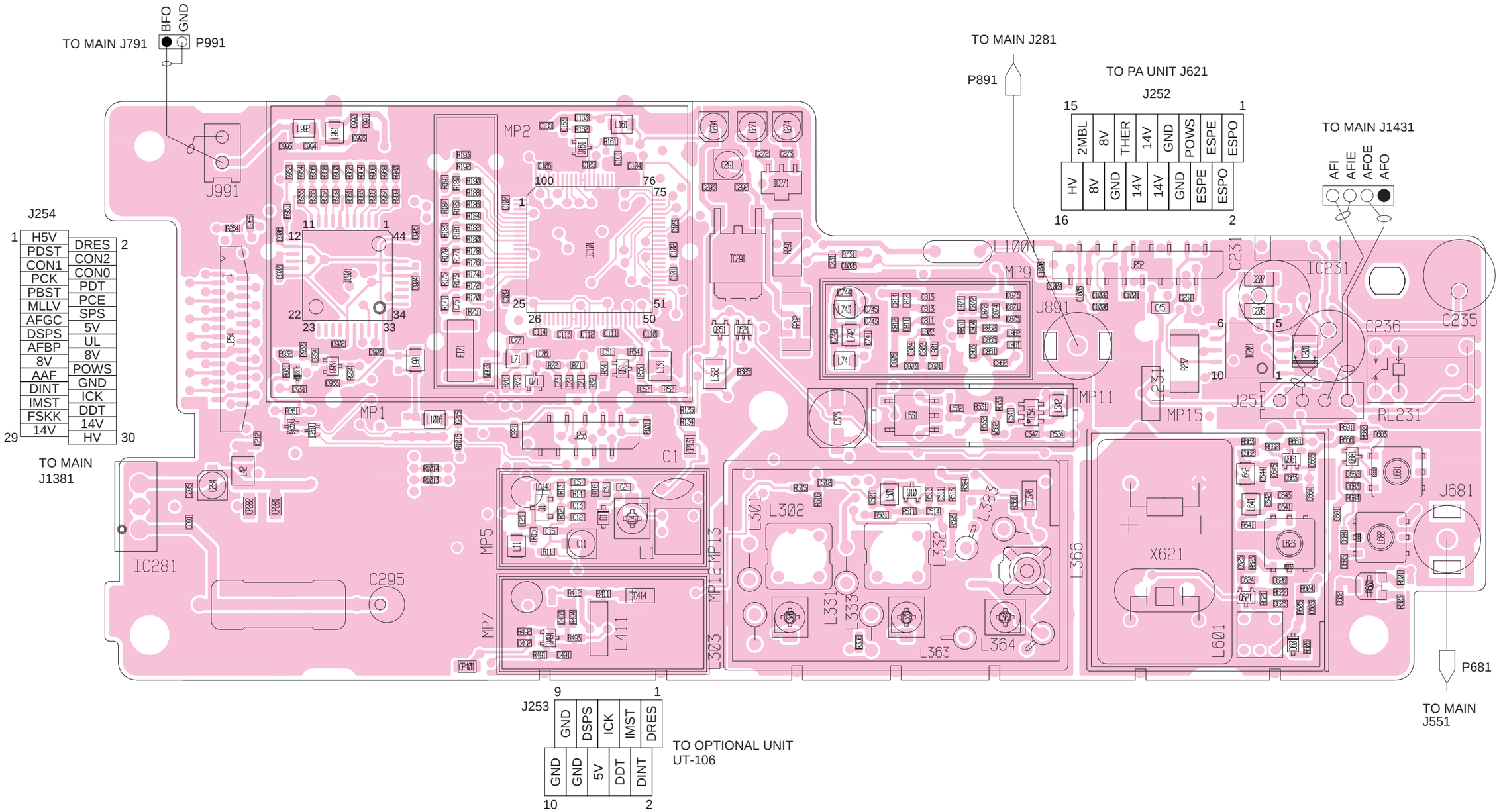

• **PLL UNIT (BOTTOM VIEW)**

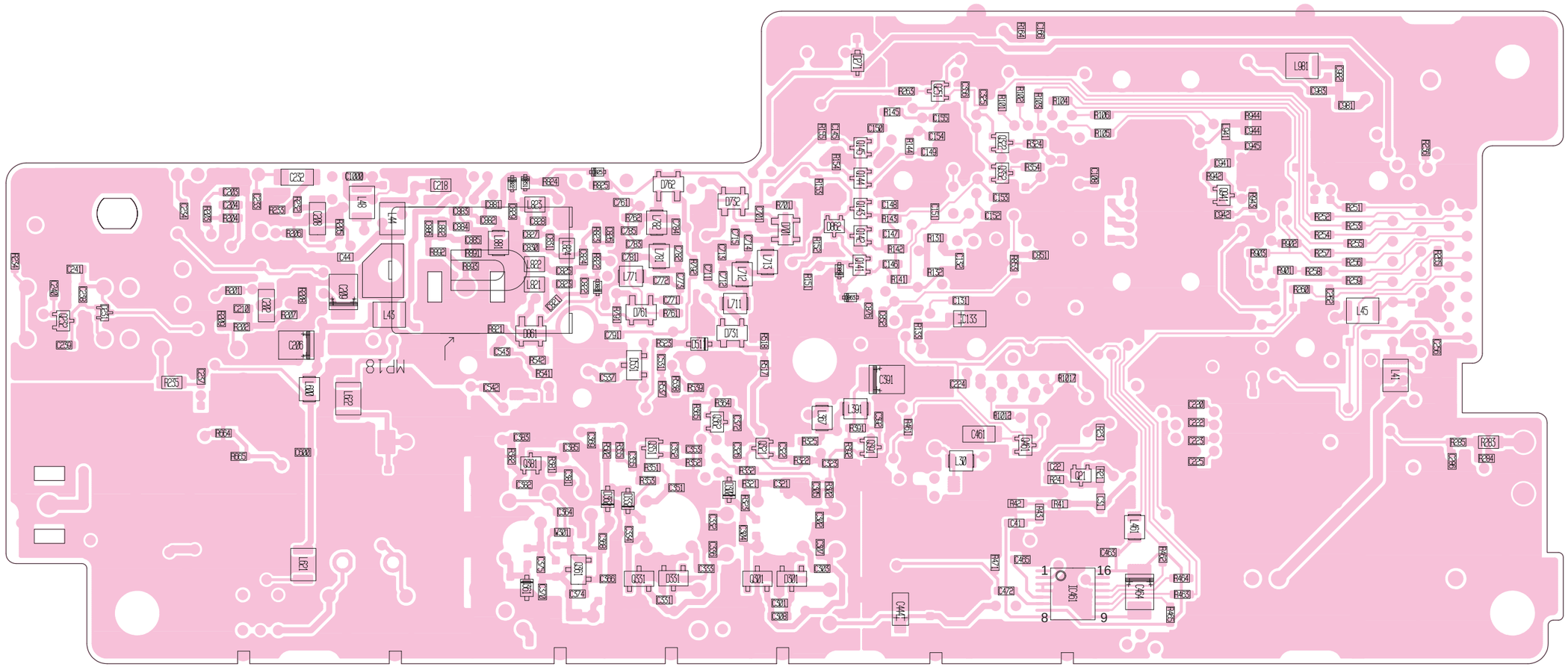

8-5 FILTER UNIT

• FILTER UNIT (TOP VIEW)

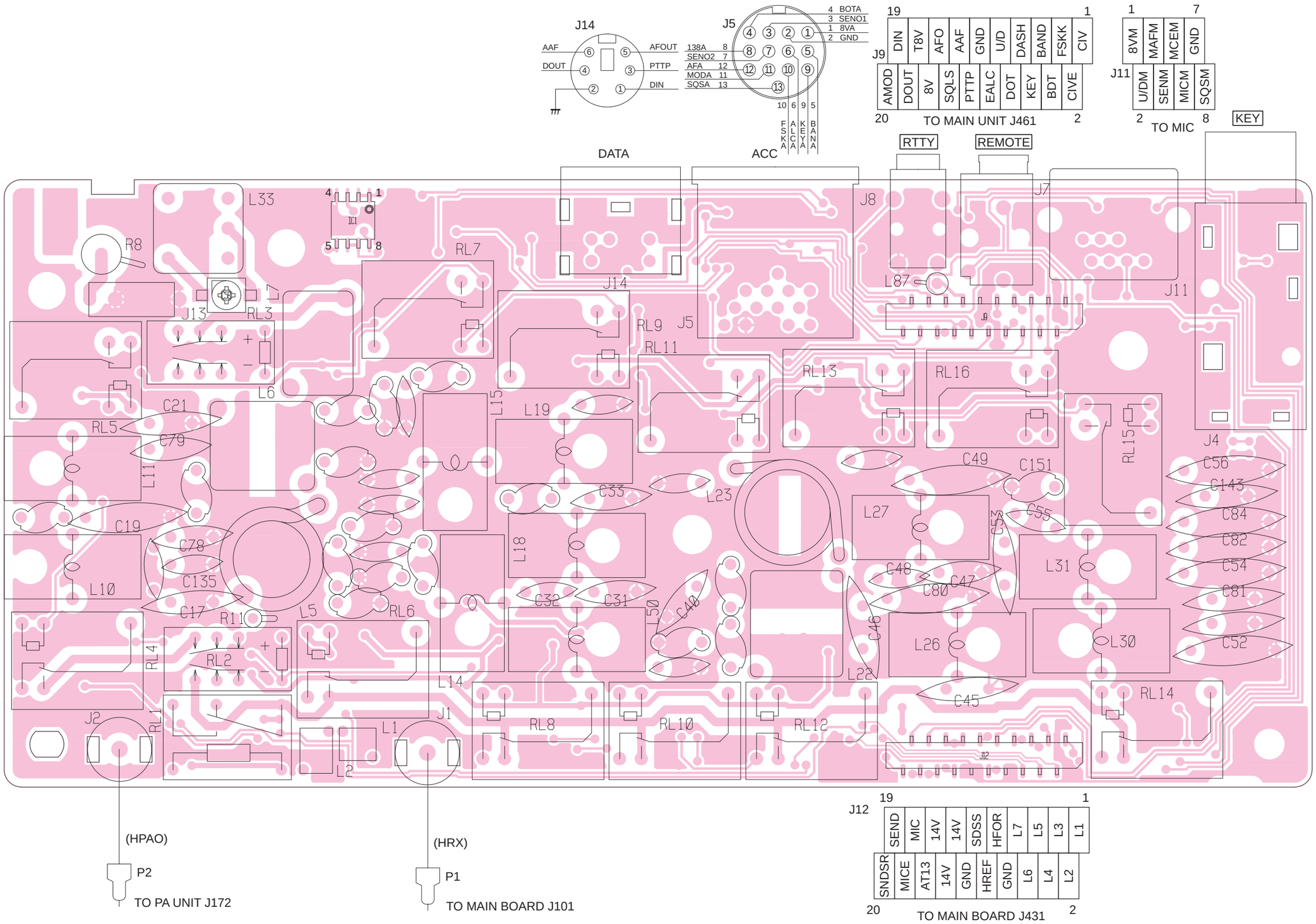

• **FILTER BOARD (BOTTOM VIEW)**

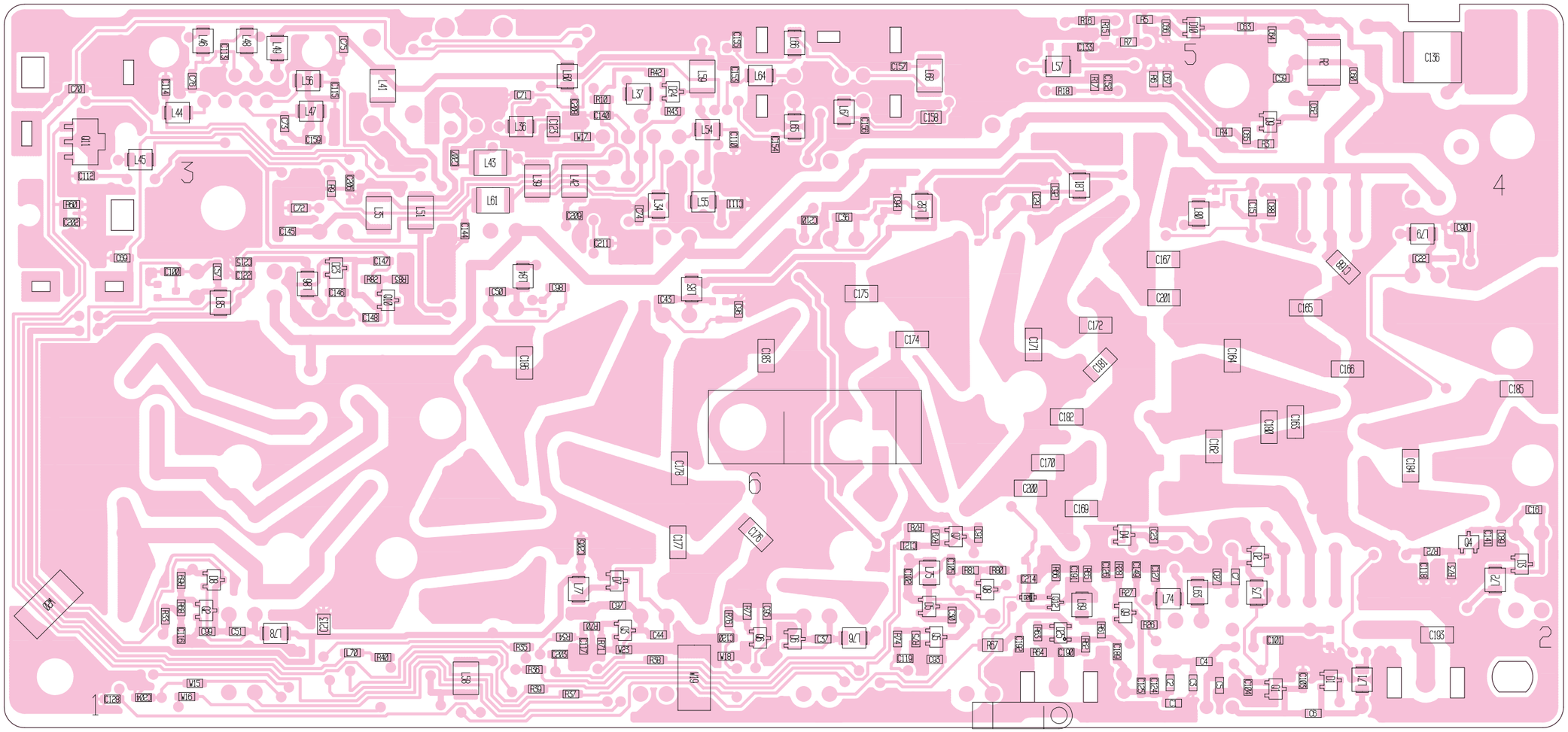

SECTION 9 BLOCK DIAGRAM

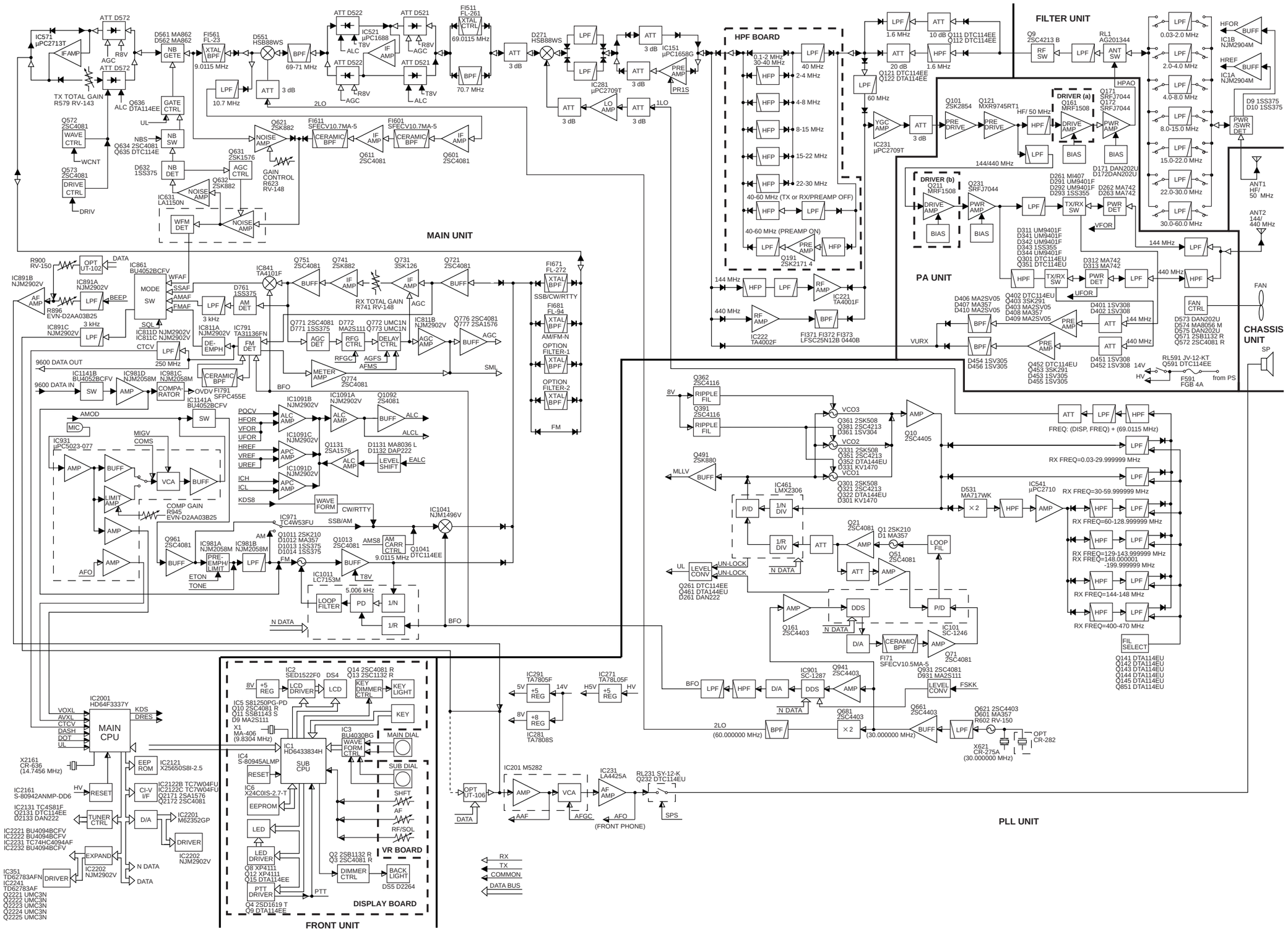

SECTION 10 VOLTAGE DIAGRAM

• FRONT UNIT

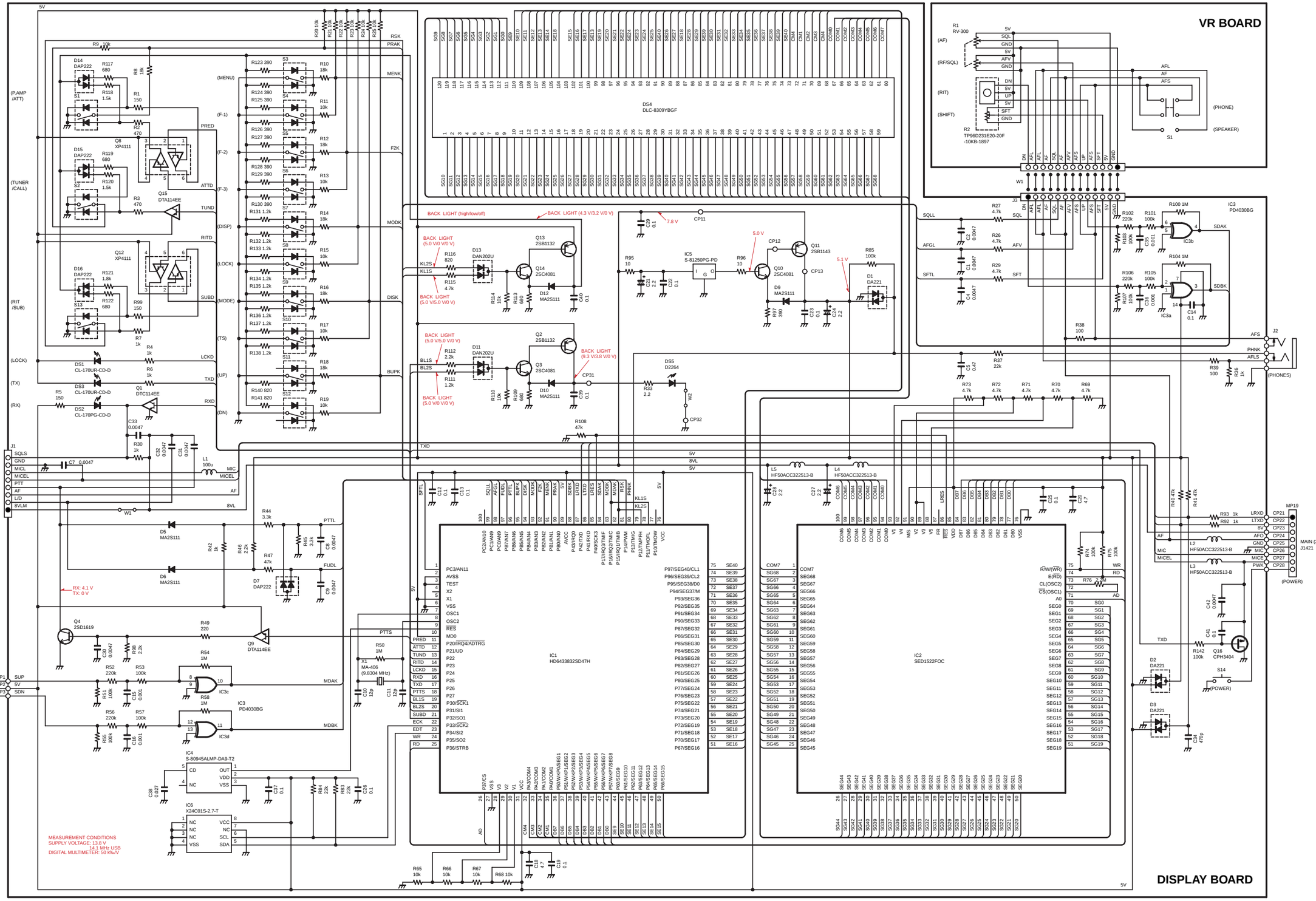

• **MAIN UNIT**

MAIN (1)

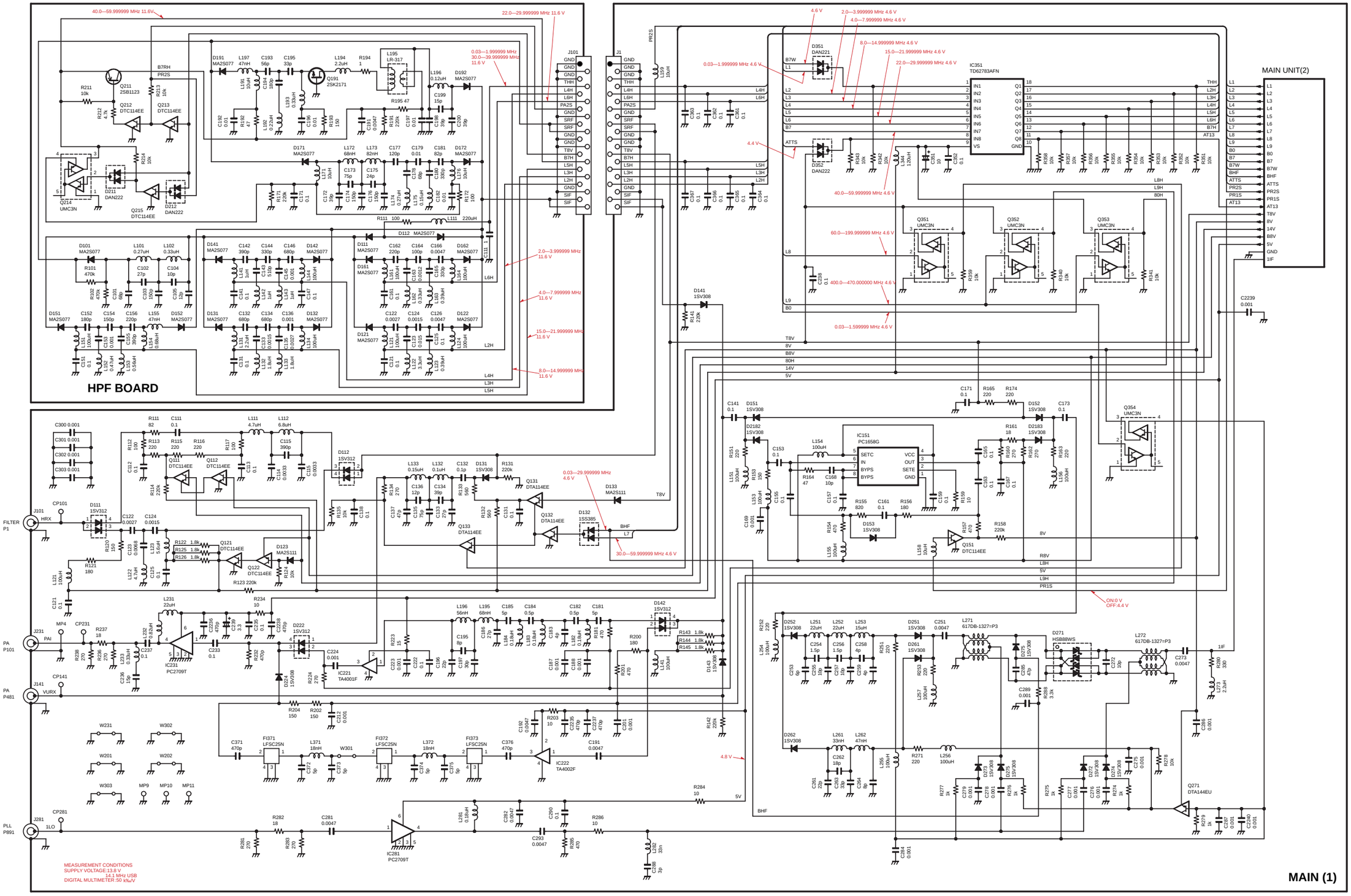

● **MAIN UNIT**

MAIN (2)

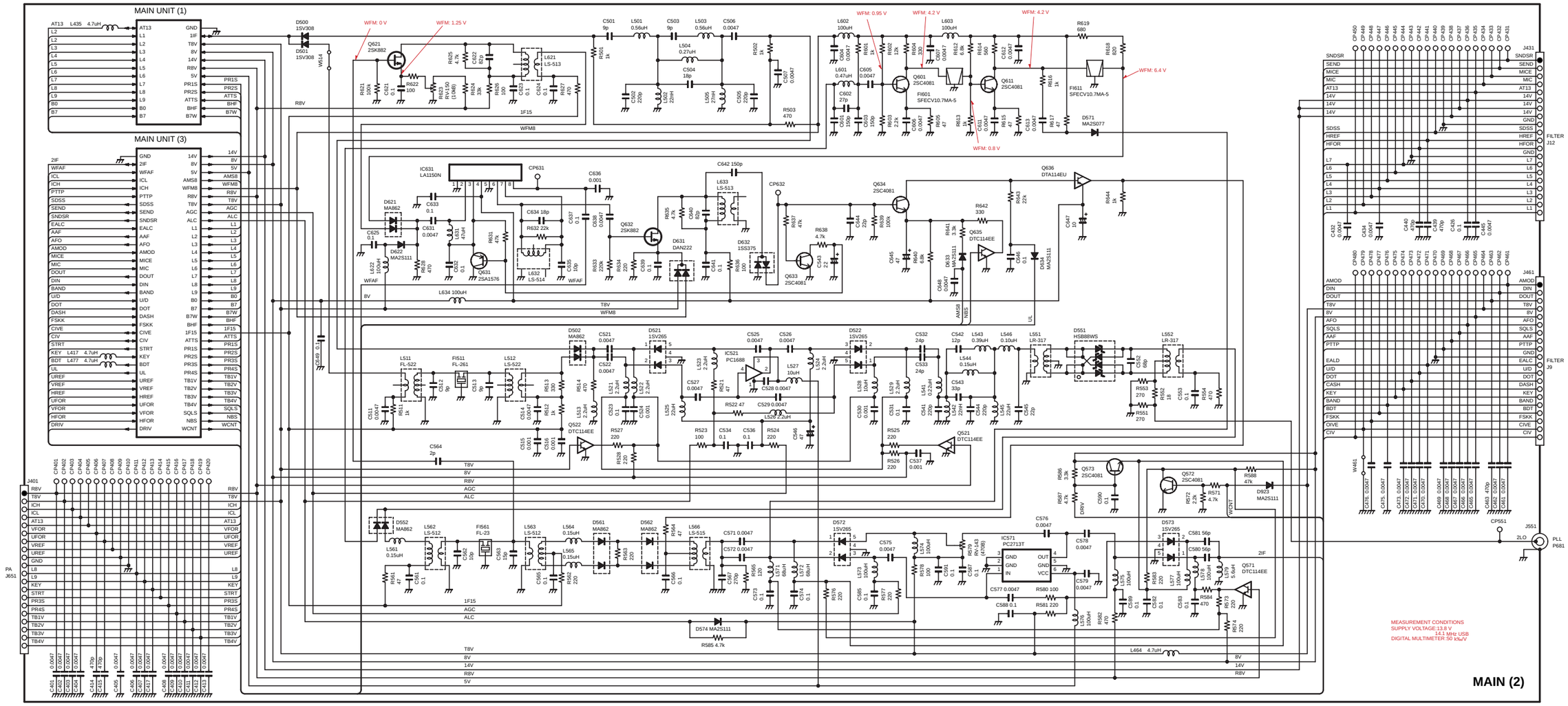

• **MAIN UNIT**

MAIN (3)

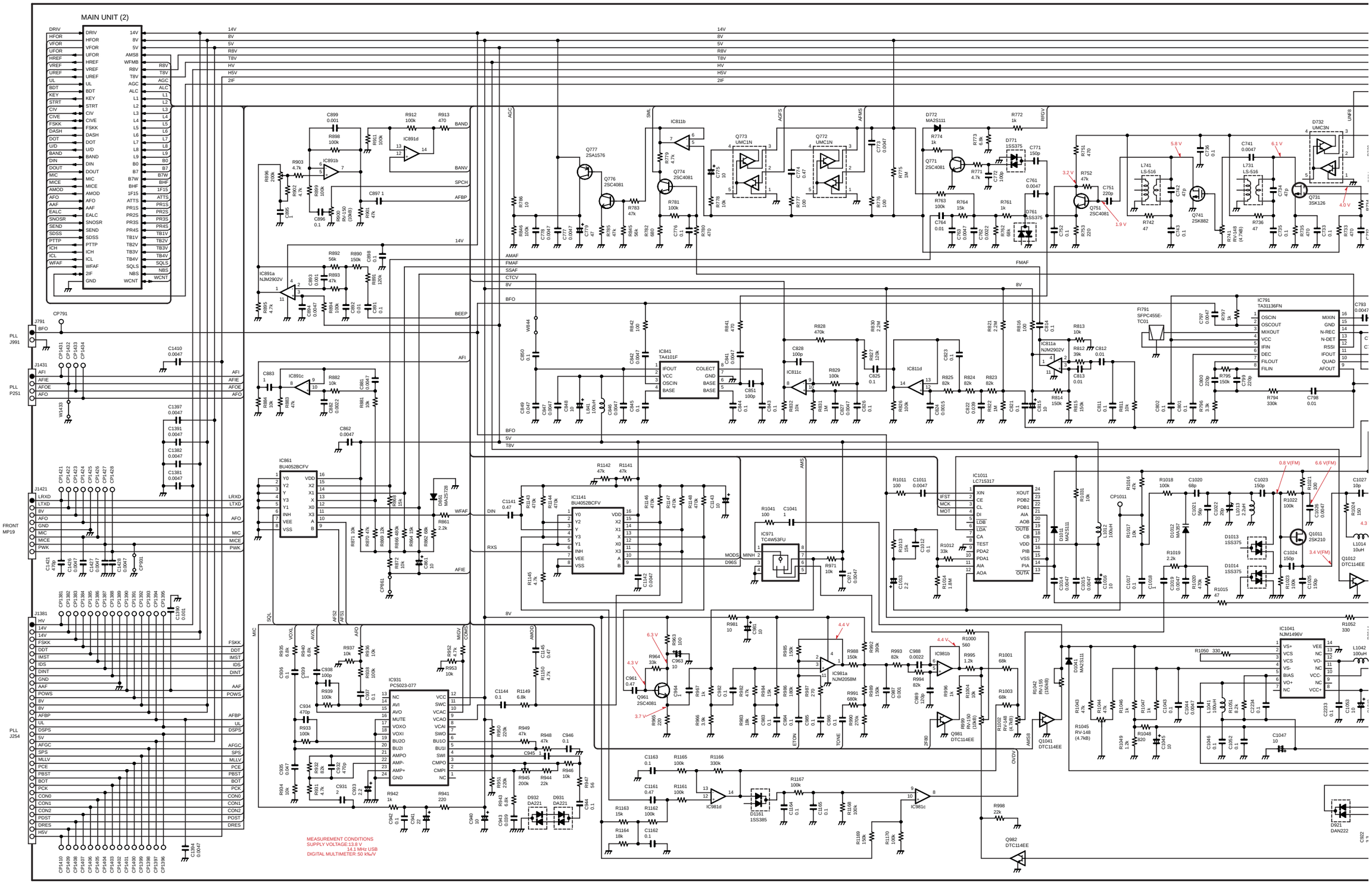

COMPLETE VIEW

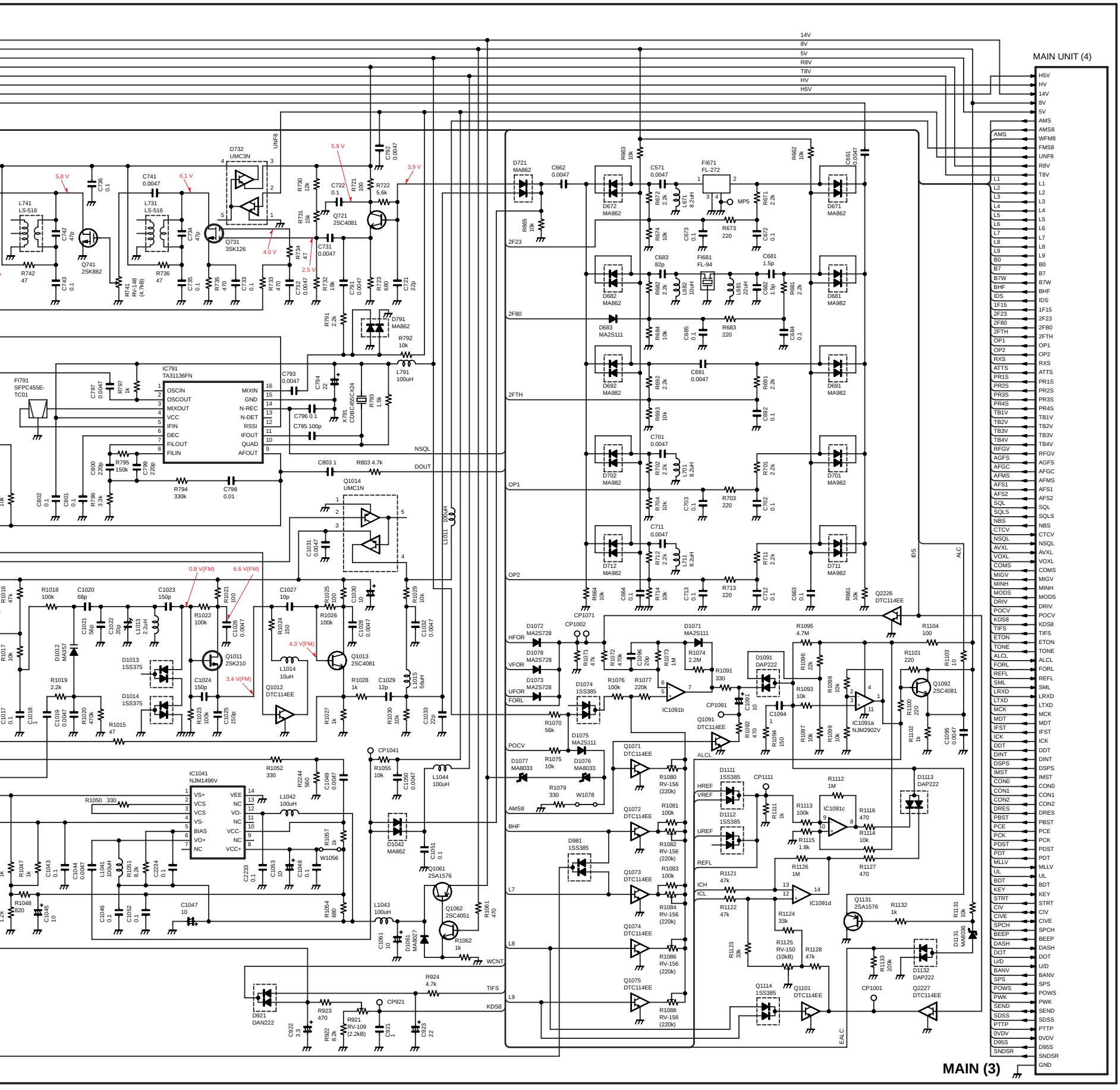

COMPLETE VIEW

• MAIN UNIT

MAIN (3)

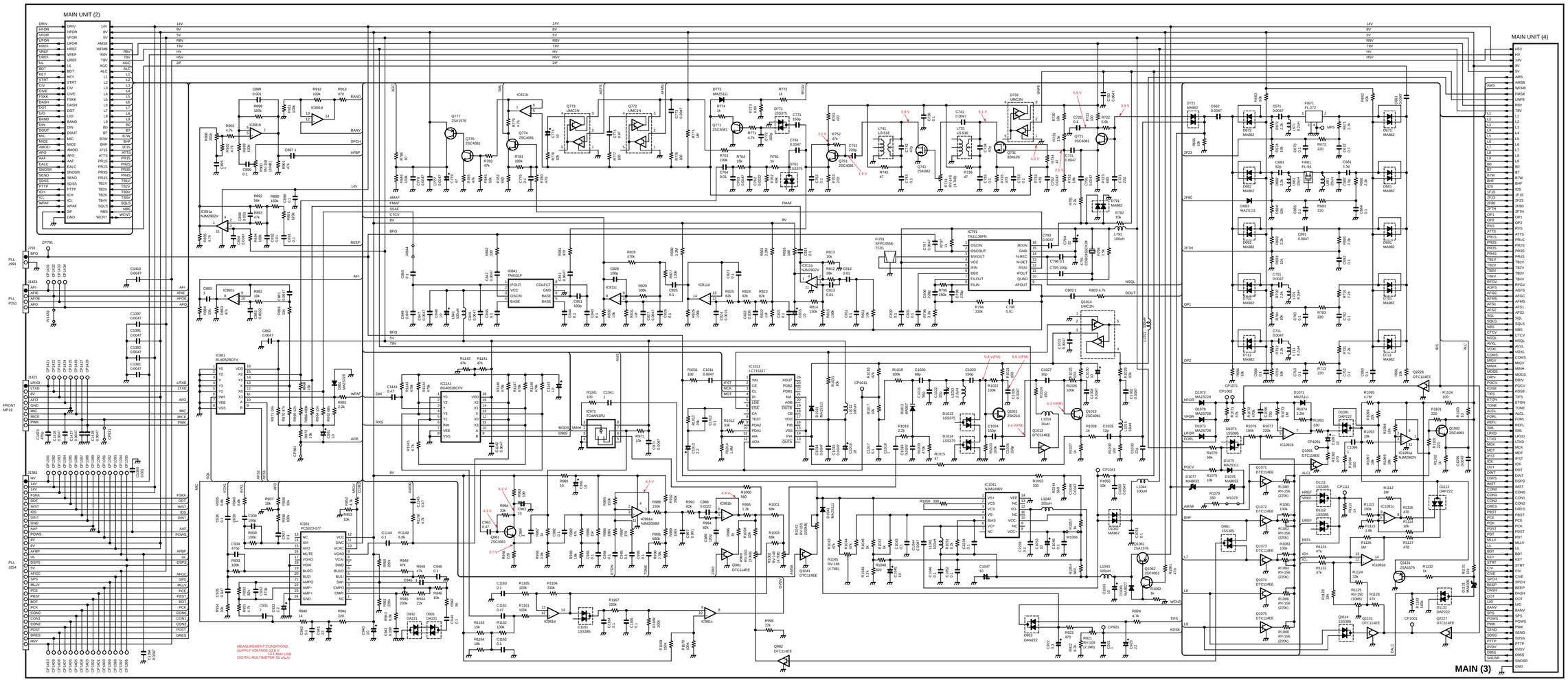

LEFT SIDE

RIGHT SIDE

• **MAIN UNIT**

MAIN (4)

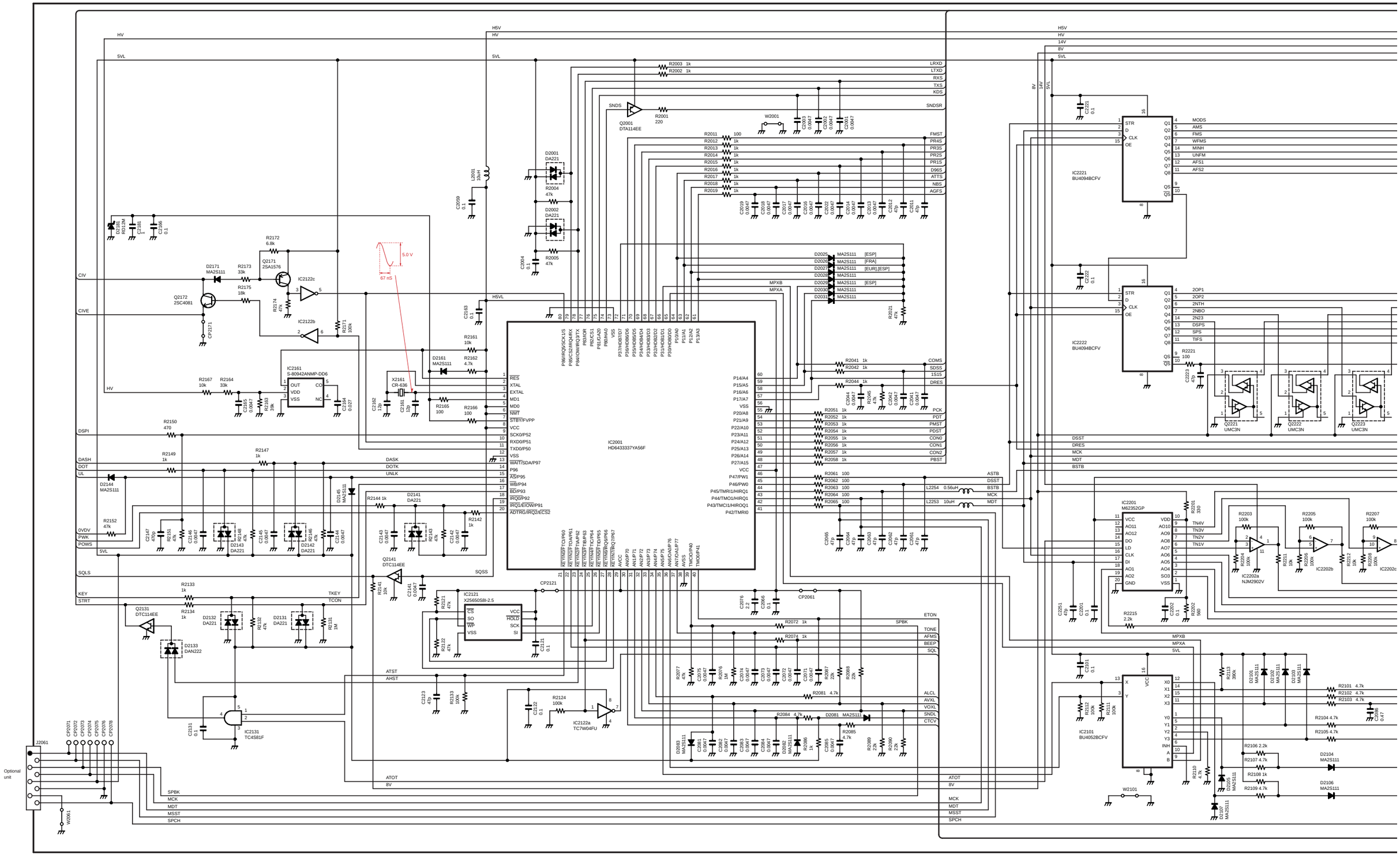

COMPLETE VIEW

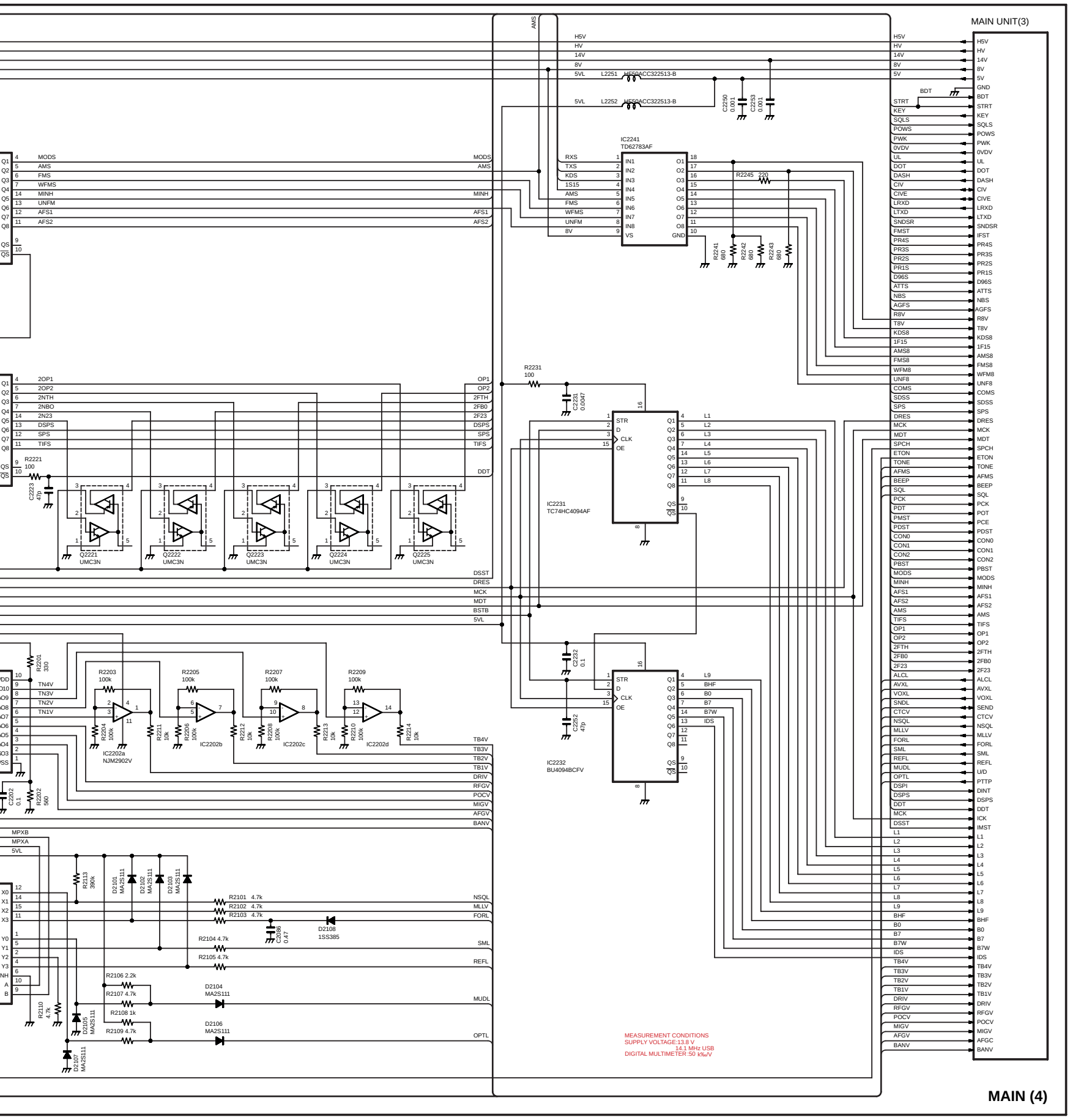

COMPLETE VIEW

• MAIN UNIT
MAIN (4)

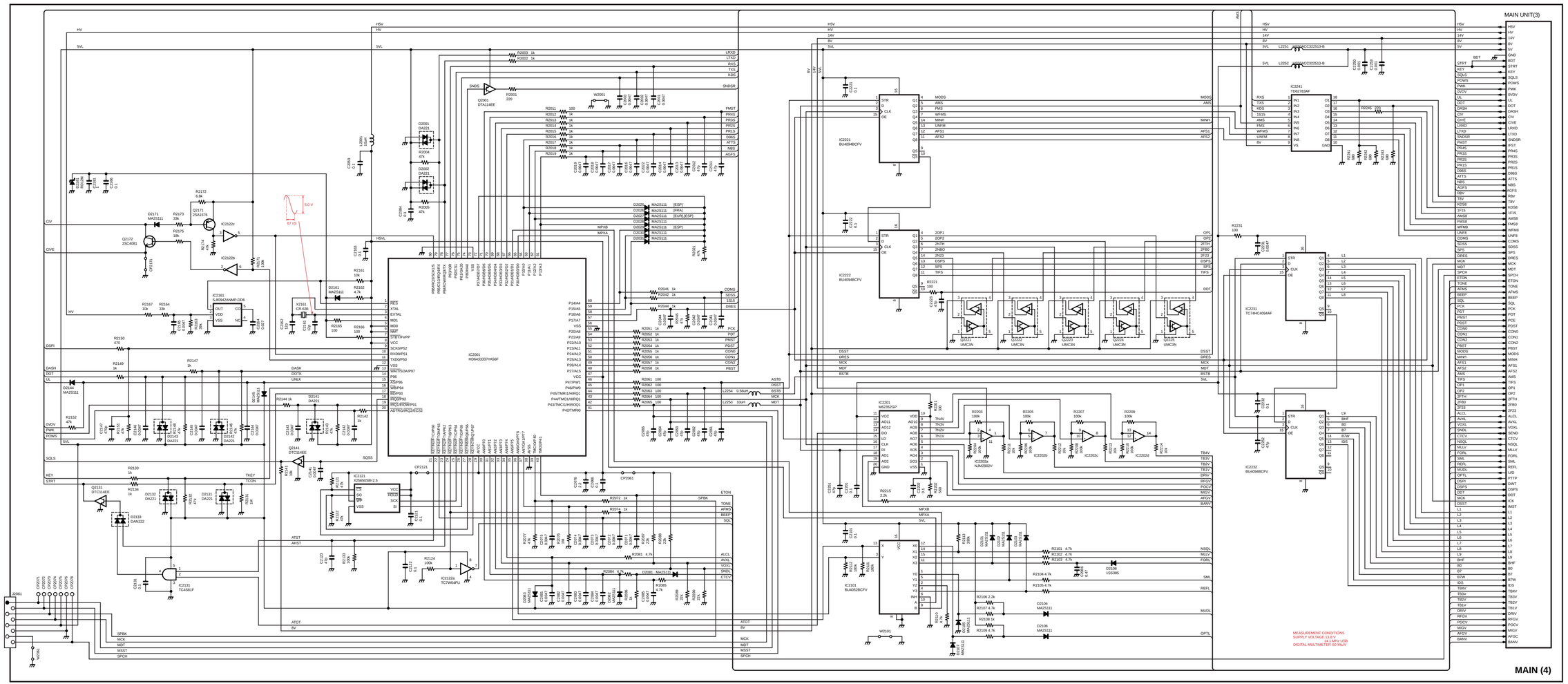

LEFT SIDE

RIGHT SIDE

• **PA UNIT**

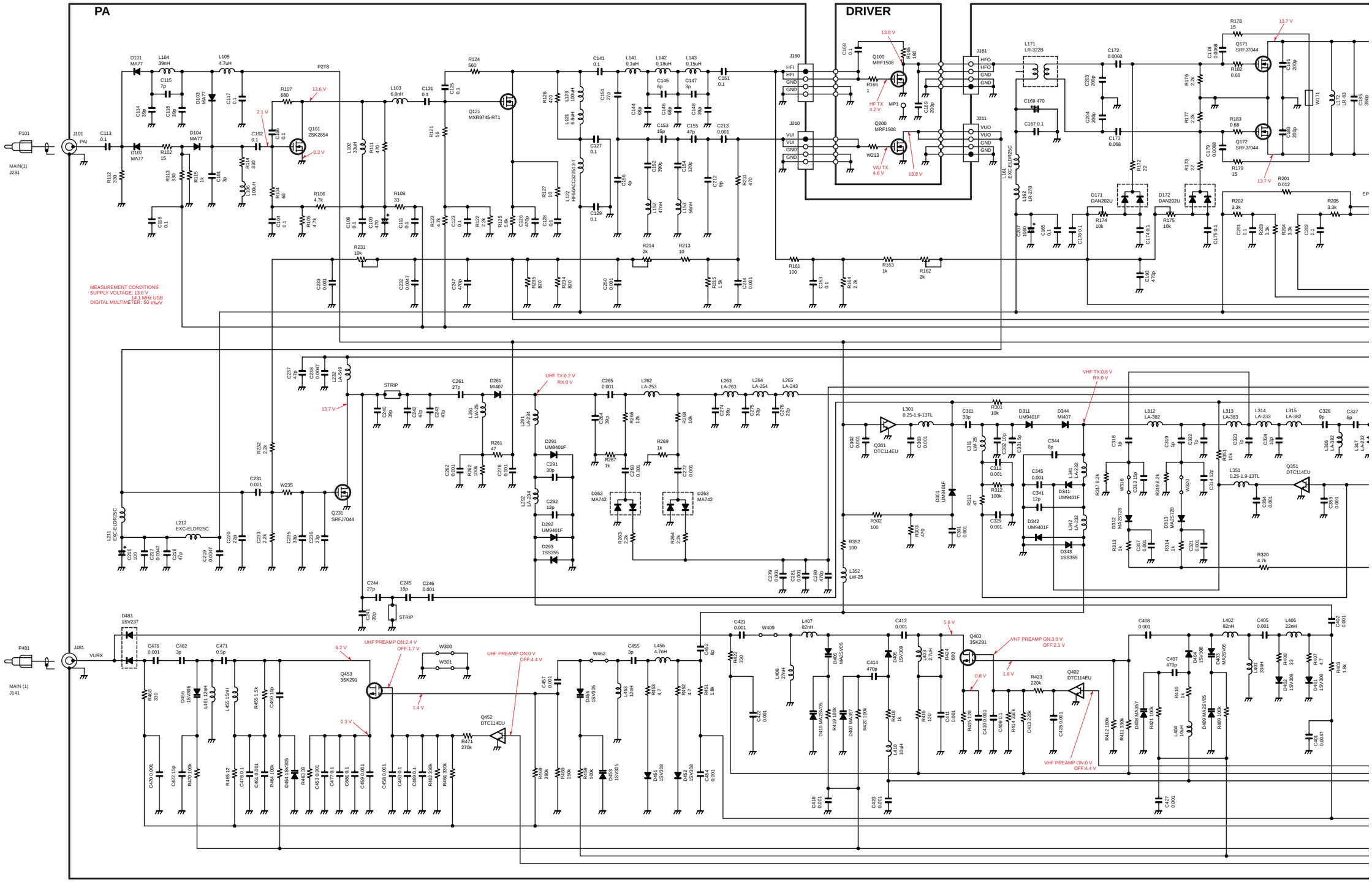

COMPLETE VIEW

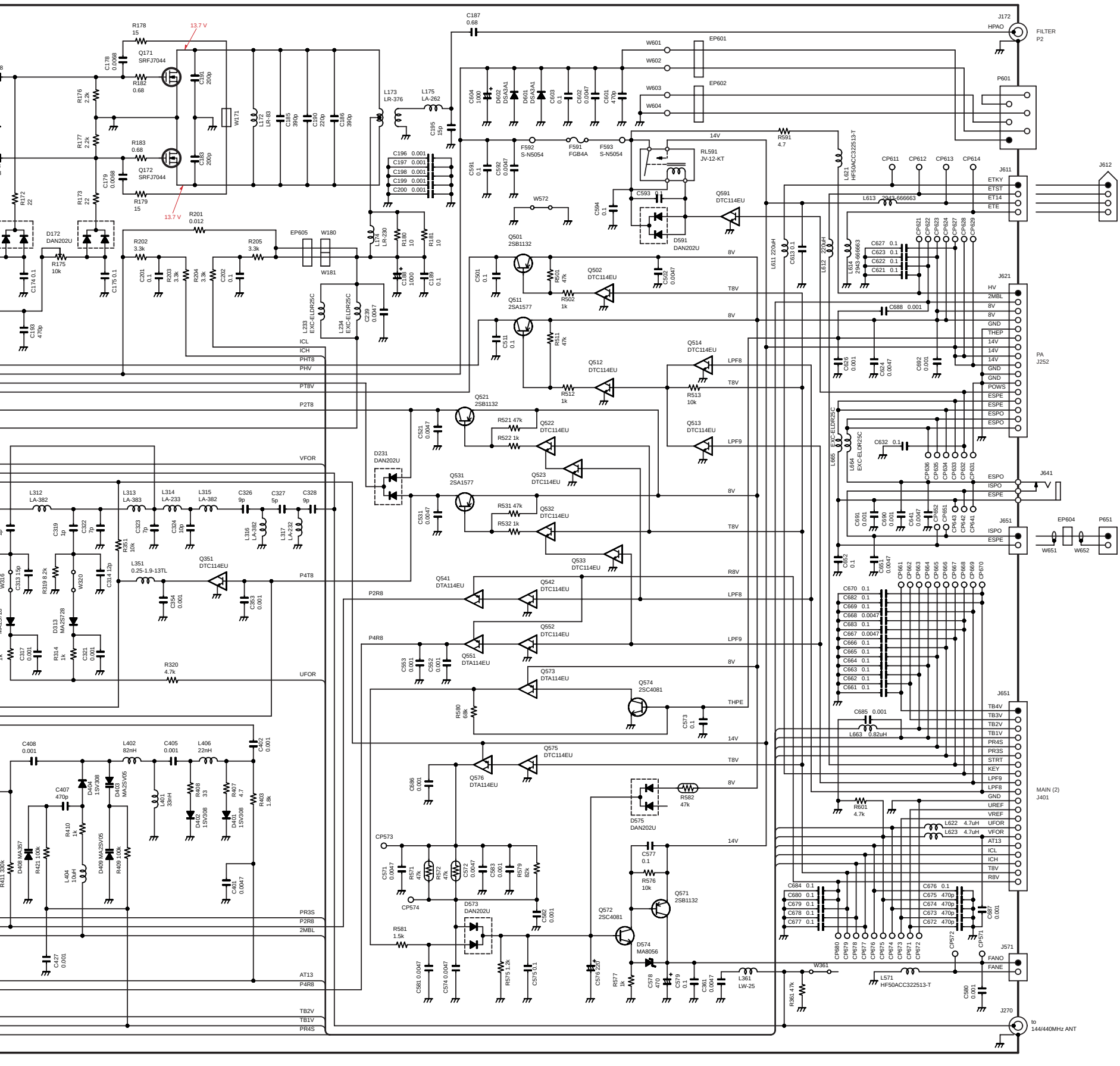

COMPLETE VIEW

• PA UNIT

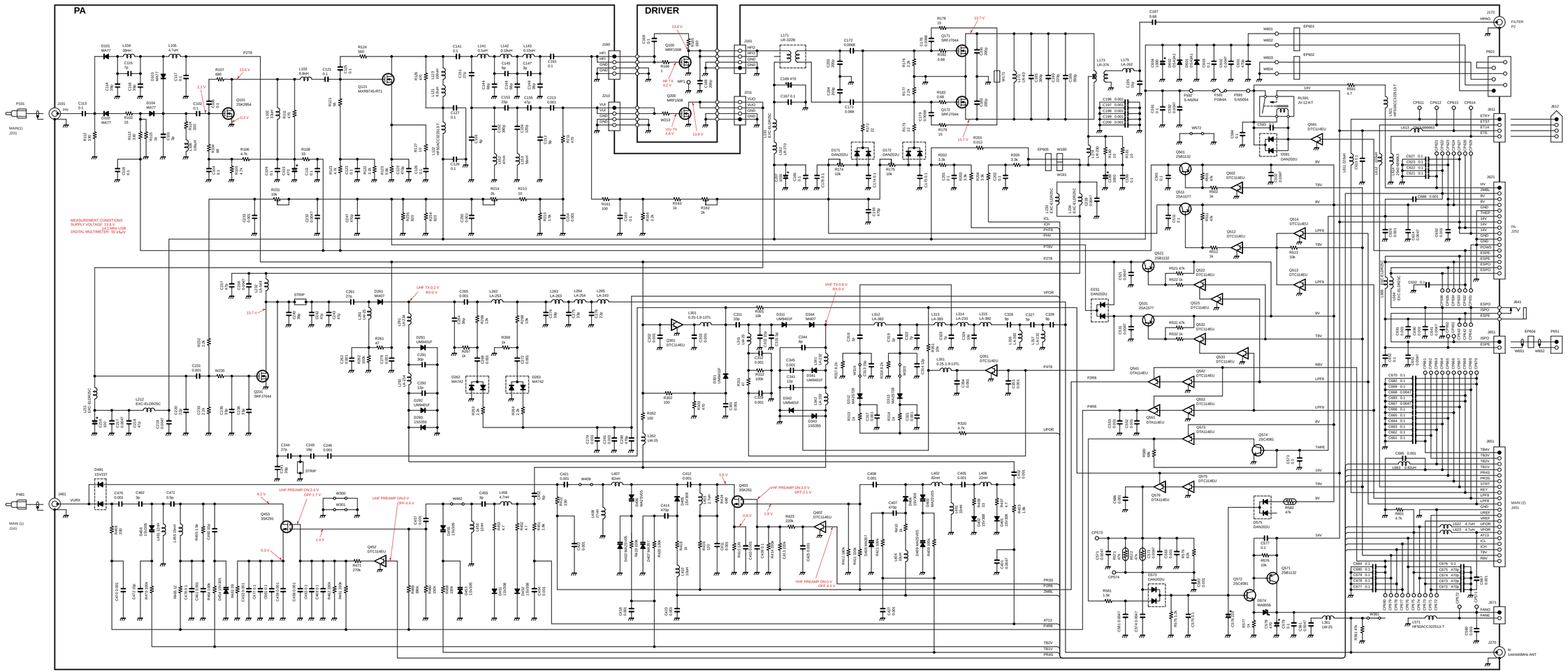

LEFT SIDE

RIGHT SIDE

• FILTER UNIT

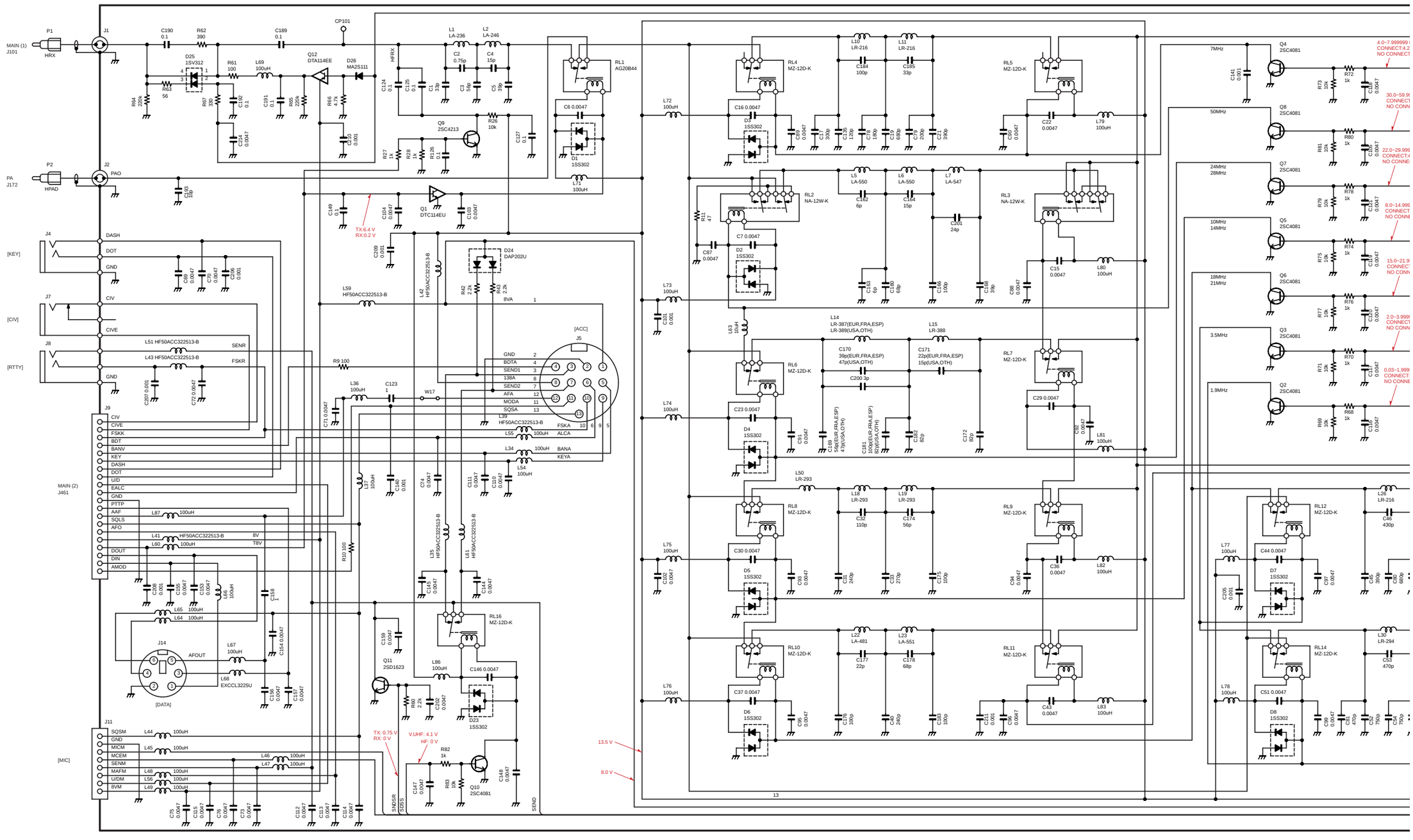

COMPLETE VIEW

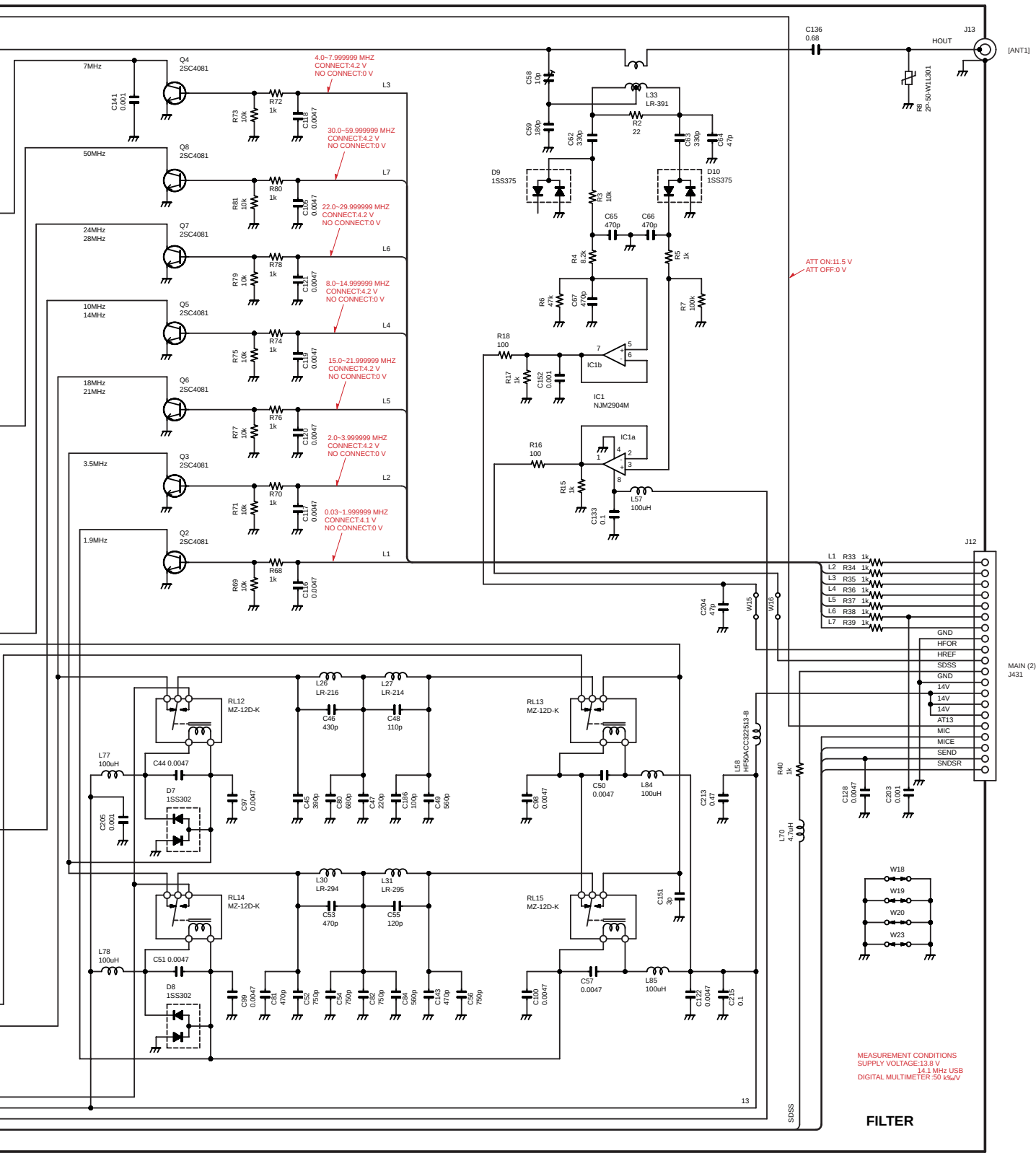

FILTER

COMPLETE VIEW

• **FILTER UNIT**

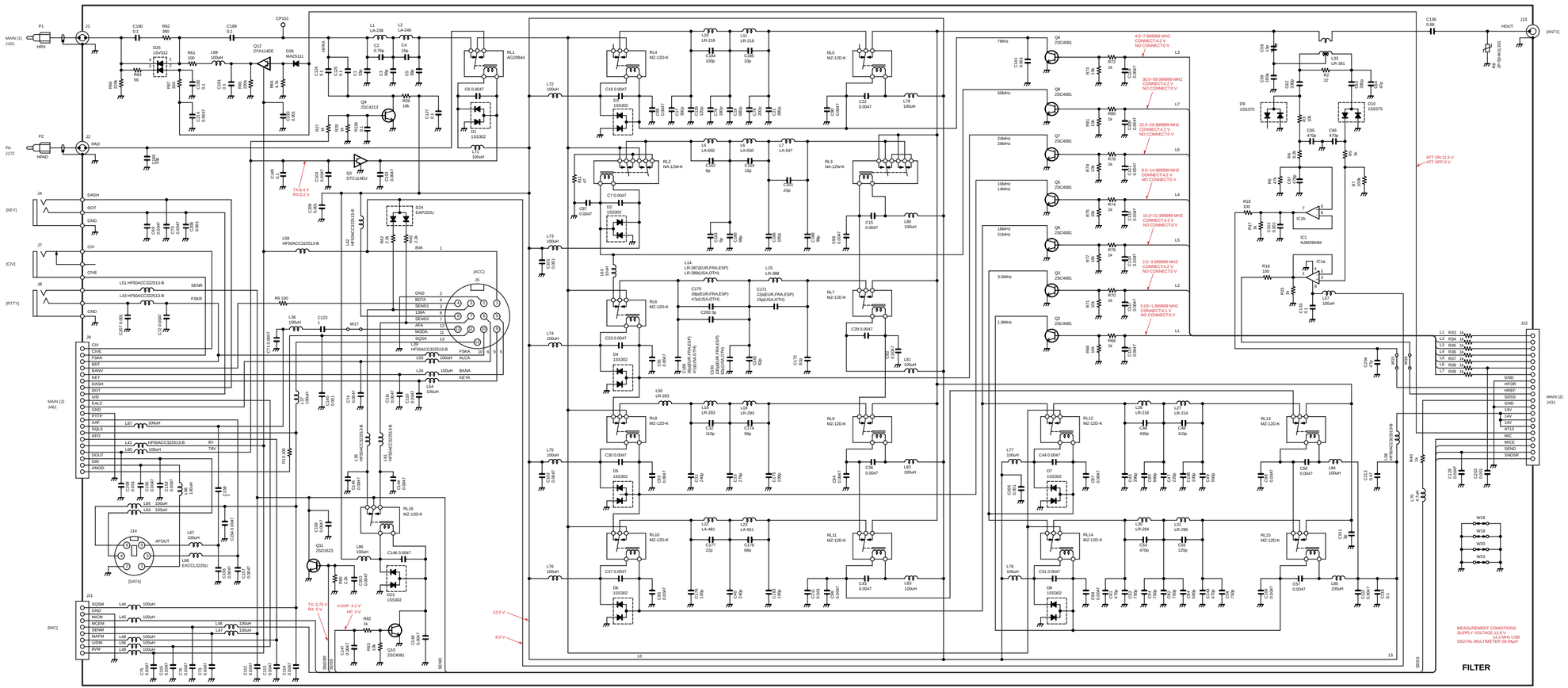

LEFT SIDE

RIGHT SIDE

• PLL UNIT

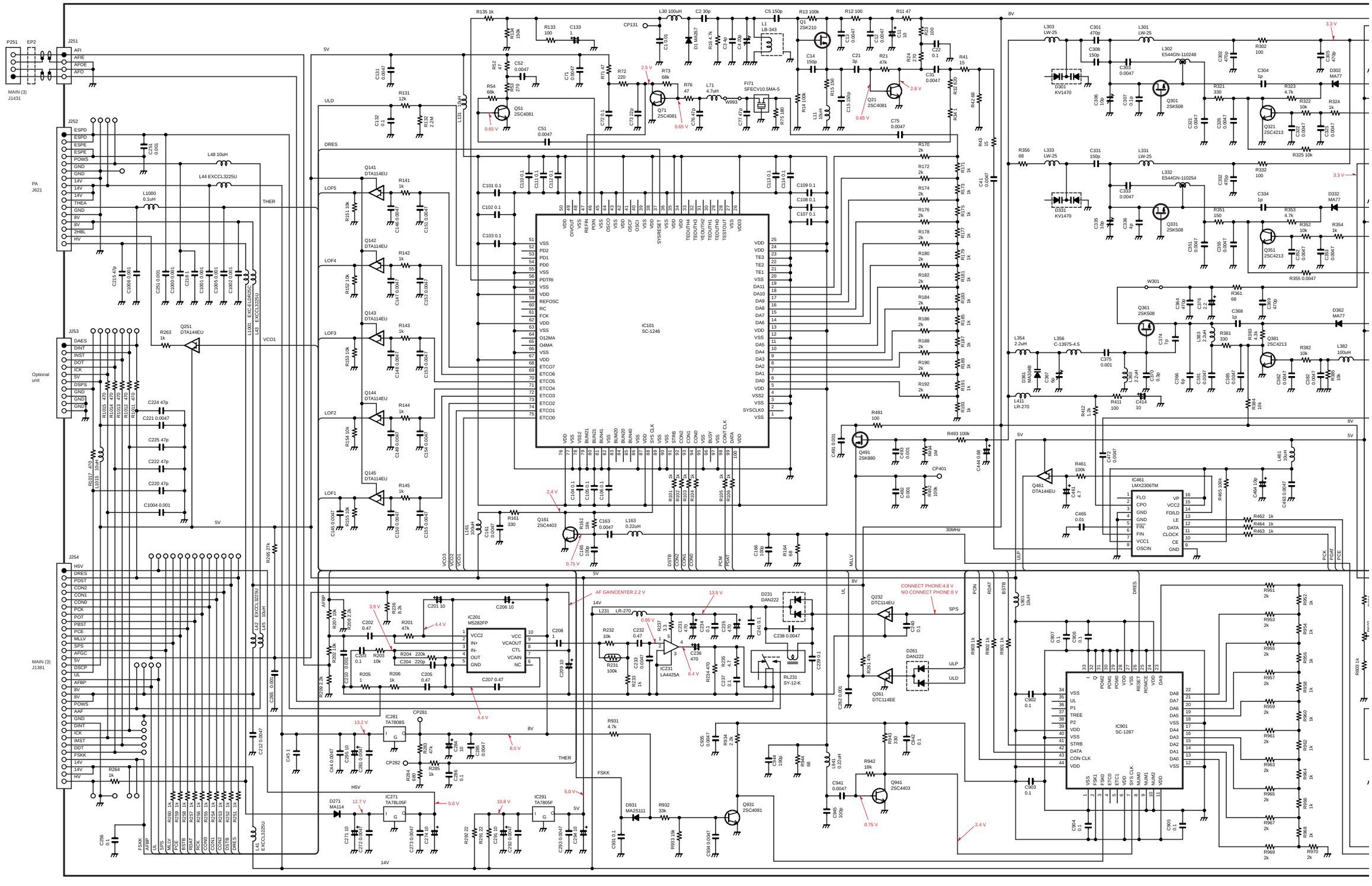
IC101
SC-1246
IC201
M5282FP
IC231
LA4425A
IC281
TA7808S
IC271
TA78L05F
IC291
TA7805F
IC461
LMX2306TM
IC901
SC-1287
Q251
DTA144EU
Q141
DTA114EU
Q142
DTA114EU
Q143
DTA114EU
Q144
DTA114EU
Q145
DTA114EU
Q51
2SC4081
Q71
2SC4081
Q161
2SC4403
Q231
LR-270
Q301
2SK508
Q321
2SC4213
Q331
2SK508
Q351
2SC4213
Q361
2SK508
Q381
2SC4213
Q491
2SK880
Q461
DTA144EU
Q931
2SC4081
Q941
2SC4403
Q232
DTC114EU
Q261
DTC114EE
Q21
2SC4081
Q1
2SK210
FI71
SFECV10.5MA-5
W993
W301
CP131
CP401
CP281
CP282
RL231
SY-12-K
D231
DAN222
D261
DAN222
D271
MA114
D931
MA2S111
D361
MA5048
D301
KV1470
D331
KV1470
D302
MA77
D332
MA77
D362
MA77
L411
LR-270
L231
LR-270
L1
LB-343
L30 100uH
L48 10uH
L44 EXCCL3225U
L1000
0.1uH
L131
10uH
L161
10uH
L163
0.22uH
L41
EXCCL3225U
L42
EXCCL3225U
L45
10uH
L1001
EXC-ELH02C
L43
EXCCL3225U
L301
LW-25
L302
E544GN-110248
L331
LW-25
L332
E544GN-110254
L333
LW-25
L303
LW-25
L354
2.2uH
L356
C-13975-4.5
L382
100uH
L383
2.2uH
L393
2.2uH
L461
100uH
L901
10uH
P251
EP2
J251
J252
J253
J254
MAIN (3)
J1431
PA
J621
Optional
unit
MAIN (3)
J1381
AFI
AFIE
AFOE
AFO
ESPD
ESPE
POWS
GND
14V
THEA
8V
2HBL
HV
DAES
DINT
INST
DOT
ICK
5V
DSPS
H5V
DRES
PDST
CON2
CON1
CON0
PCK
POT
PBST
PCE
MLLV
SPS
AFGC
DSCP
UL
AFBP
POWS
AAF
IMST
DDT
FSKK
ULD
LOF5
LOF4
LOF3
LOF2
LOF1
THER
VCO1
VCO2
VCO3
30MHz
PON
RDAT
BSTB
DRES
ULP
SPS
PCK
PDAT
PCE
AF GAINCENTER:2.2 V
CONNECT PHONE:4.8 V
NO CONNECT PHONE:0 V
2.5 V
2.8 V
0.65 V
3.3 V
2.4 V
0.75 V
3.9 V
4.4 V
13.5 V
0.85 V
6.4 V
13.2 V
8.0 V
12.7 V
5.0 V
10.8 V

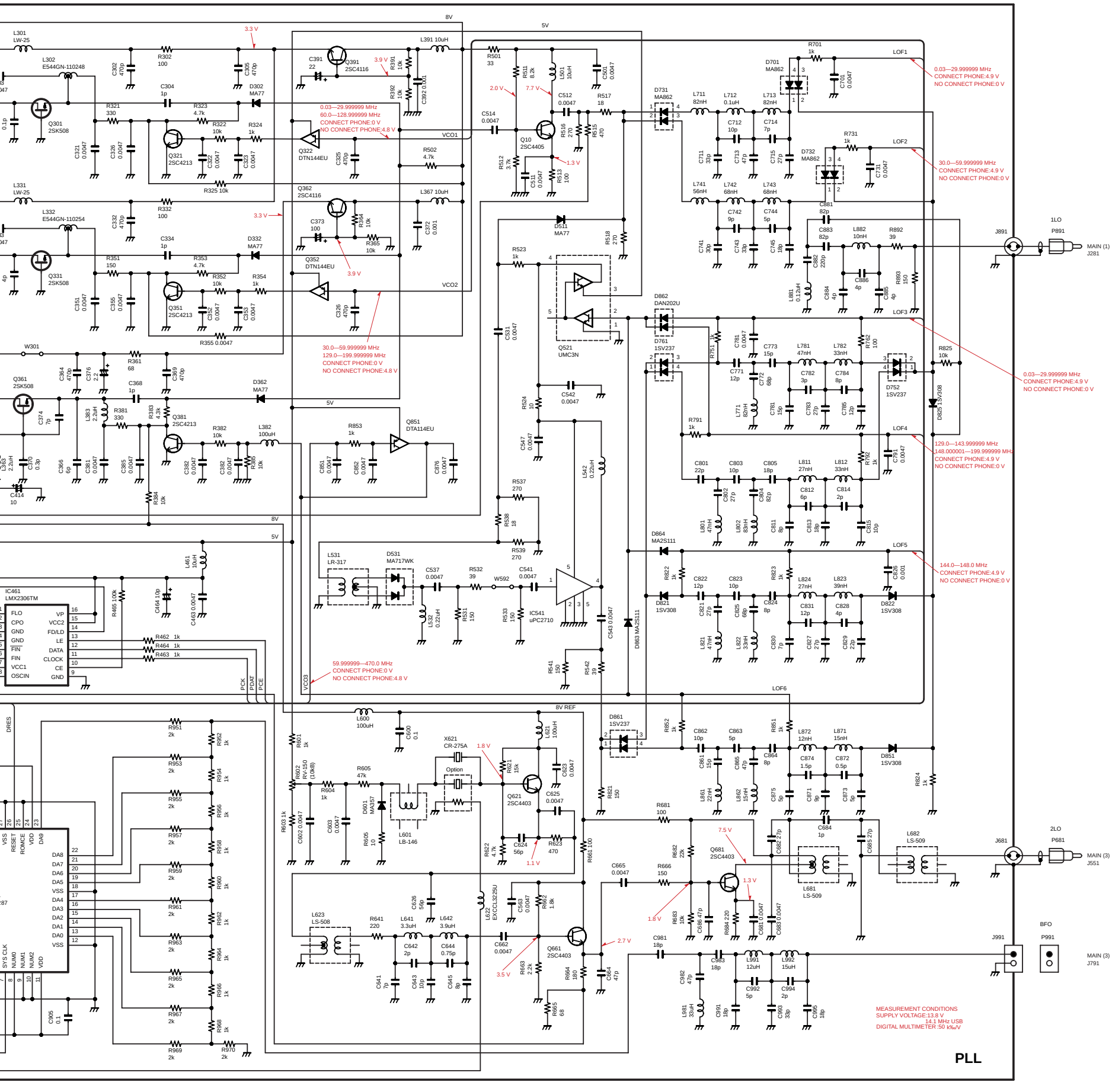

COMPLETE VIEW

• PLL UNIT

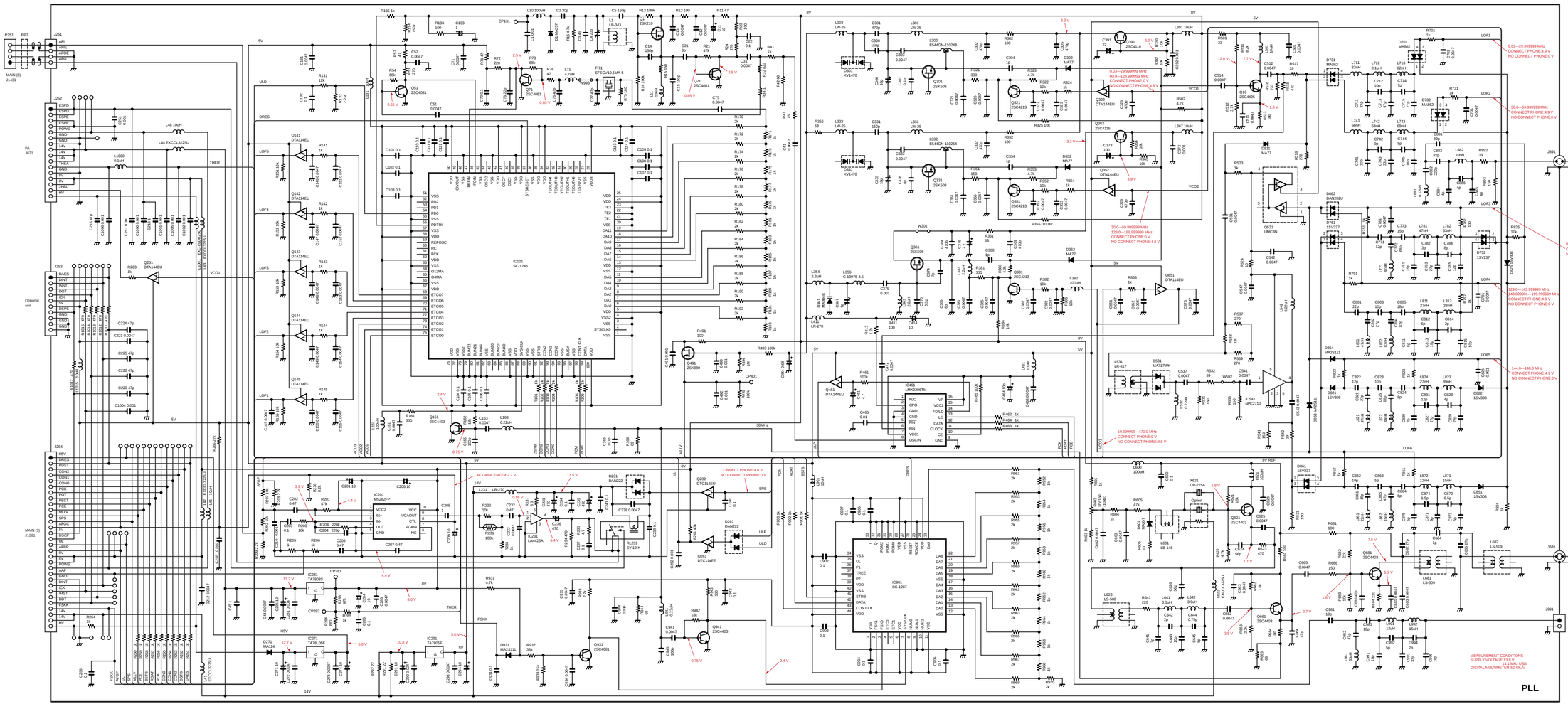

LEFT SIDE

RIGHT SIDE

Icom Inc.

6-9-16, Kamihigashi, Hirano-ku, Osaka 547-0002, Japan
Phone : 06 6793 5302
Fax : 06 6793 0013

Icom America Inc.

<Corporate Headquarters>
2380 116th Avenue N.E., Bellevue, WA 98004, U.S.A.
Phone : (425) 454-8155 Fax : (425) 454-1509
URL : http://www.icomamerica.com
<Customer Service>
Phone : (425) 454-7619

Icom Canada

A Division of Icom America Inc.
3071 #5 Road, Unit 9, Richmond, B.C., V6X 2T4, Canada
Phone : (604) 273-7400 Fax : (604) 273-1900

Icom (Australia) Pty. Ltd.

A.C.N. 006 092 575
290-294 Albert Street, Brunswick, Victoria, 3056, Australia
Phone : 03 9387 0666 Fax : 03 9387 0022
URL : http://www.icom.net.au

Asia Icom Inc.

6F No. 68, Sec. 1 Cheng-Teh Road, Taipei, Taiwan R.O.C.
Phone : (02) 2559 1899 Fax : (02) 2559 1874

Icom (Europe) GmbH

Communication Equipment
Himmelgeister Str. 100, D-40225 Düsseldorf, Germany
Phone : 0211 346047 Fax : 0211 333639
URL : http://www.icomeurope.com

Icom Spain S.L.

Crta. de Gracia a Manresa Km. 14,750
08190 Sant Cugat del Valles Barcelona, SPAIN
Phone : (93) 590 26 70 Fax : (93) 589 04 46
URL : http://www.icomspain.com

Icom (UK) Ltd.

Unit 9, Sea St., Herne Bay, Kent, CT6 8LD, U.K.
Phone : 01227 741741 Fax : 01227 741742
URL : http://www.icomuk.co.uk

Icom France S.a

Zac de la Plaine, Rue Brindejonc des Moulinais
BP 5804, 31505 Toulouse Cedex, France
Phone : 561 36 03 03 Fax : 561 36 03 00
URL : http://www.icom-france.com

Count on us!

Icom Inc.
6-9-16, Kamihigashi, Hirano-ku Osaka 547-0002, Japan

A-5564HI-S
© 1999 by Icom Inc.